Launch Day

What pushes a rocket off the launchpad?

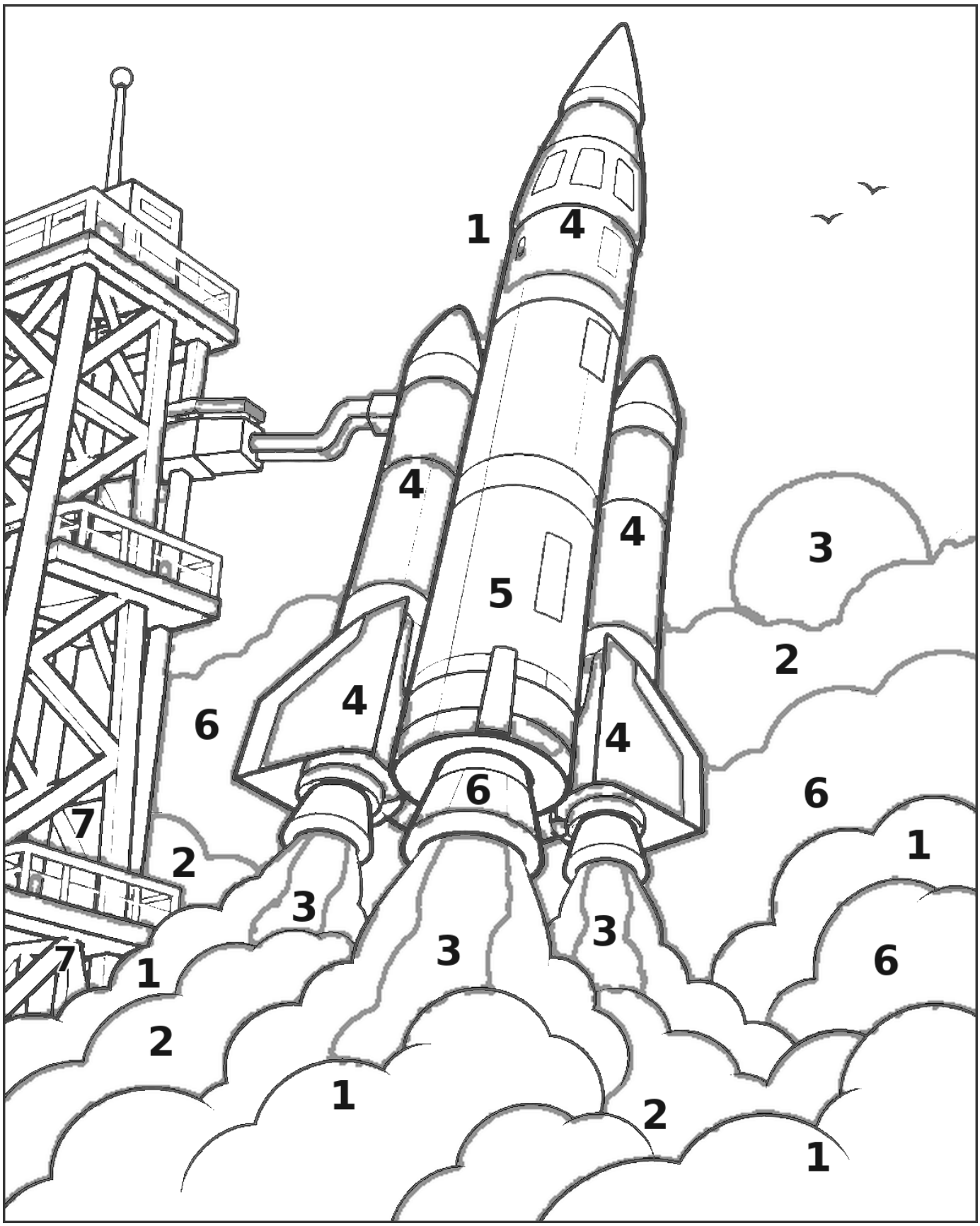

1 Gold
2 Periwinkle
3 Ivory
4 Parchment
5 Honey
6 Lilac
7 Charcoal

Did you know? The engine shoots hot gas downward at high speed. The gas pushes back on the rocket in the opposite direction. That upward push is called thrust.

Stage Separation

Why does a rocket drop pieces on the way up?

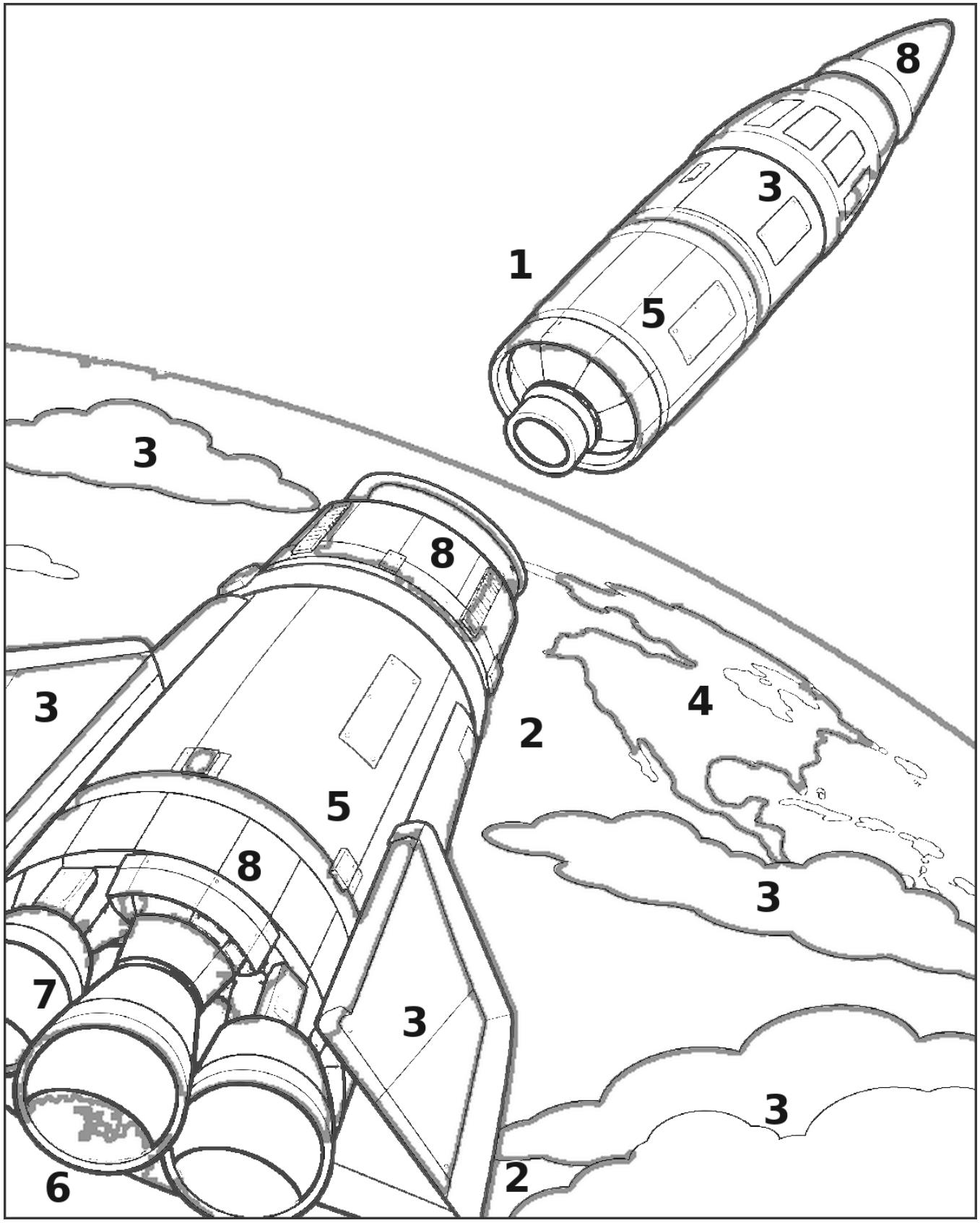

1 Plum
2 Lagoon
3 Parchment
4 Fog
5 Rust
6 Ink blue
7 Charcoal
8 Stone

Did you know? A rocket can be built in stages. After the first stage uses most of its propellant, it drops away. The next stage then accelerates without carrying the empty tanks and engines below it.

Cockpit Window

Why does a spacecraft have windows as well as screens?



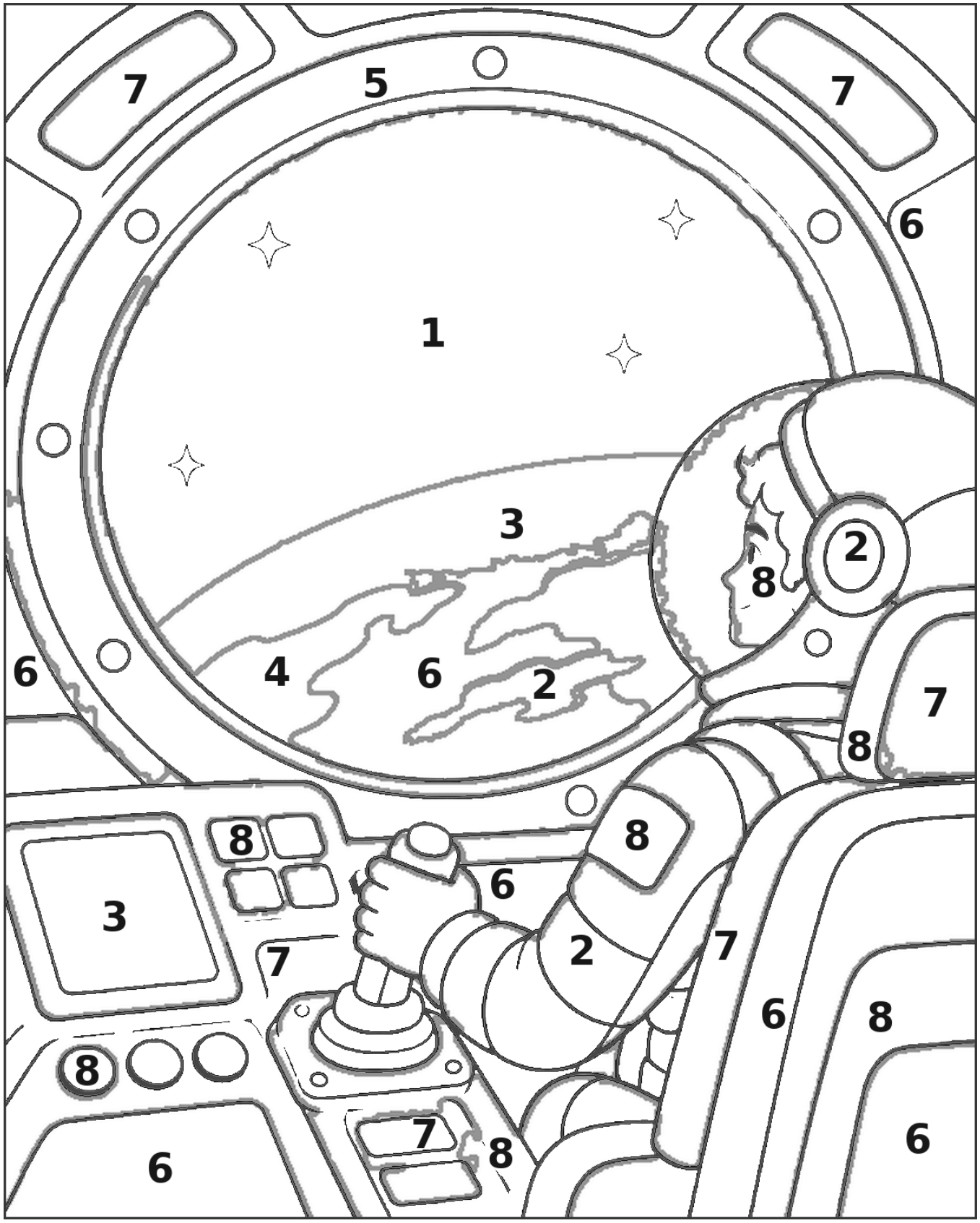

1 Plum
2 Parchment
3 Denim
4 Sage
5 Gold
6 Dusk
7 Mauve
8 Honey

Did you know? Astronauts can look through the windows to see landmarks and nearby spacecraft. Inside NASA's Orion capsule, three screens show information from the spacecraft's computers. The crew can use that information and their controls to guide the capsule.

Booster Landing

Why would a rocket land on a ship?

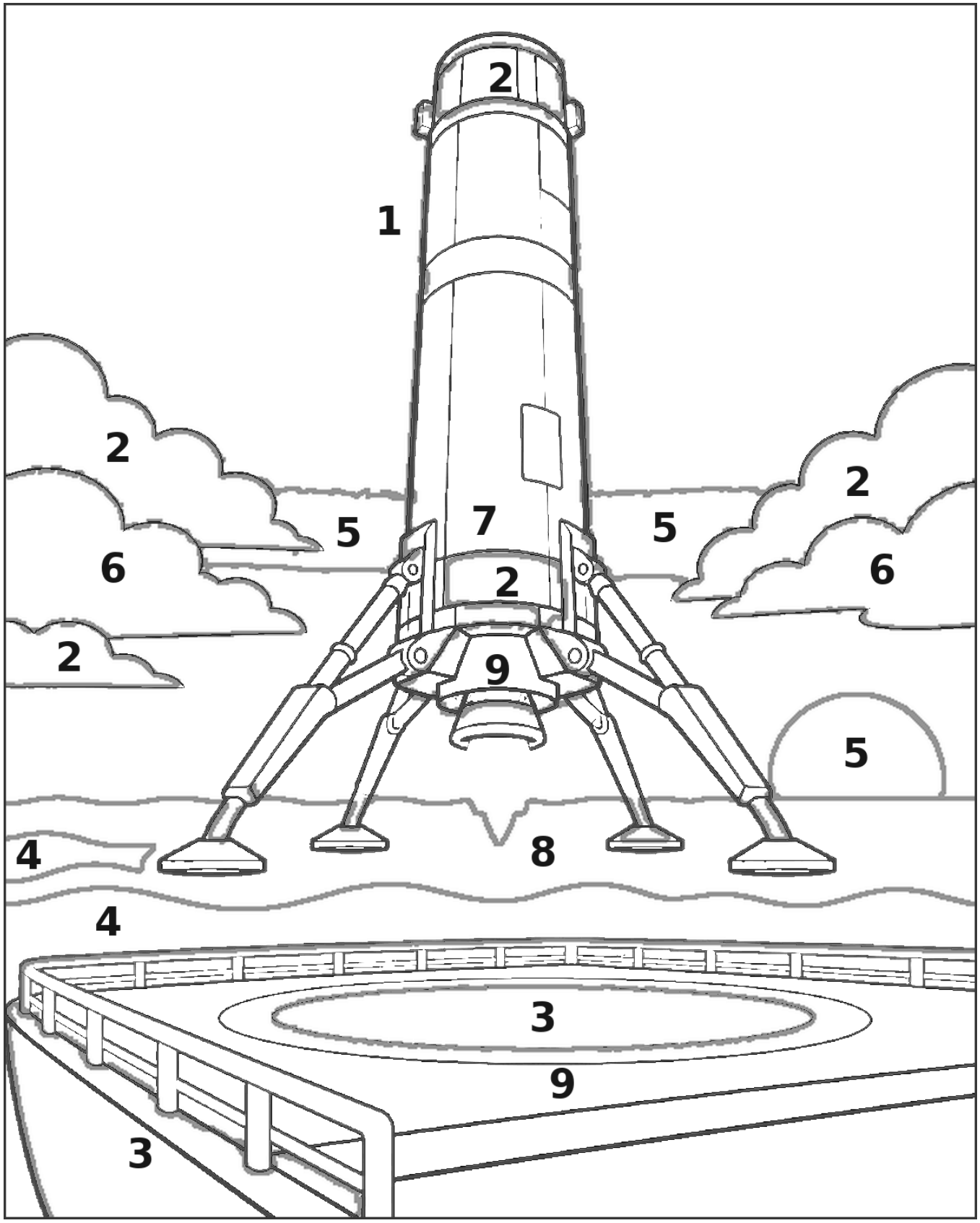

1 Sky
2 Cream
3 Plum
4 Ink blue
5 Seafoam
6 Lilac
7 Honey
8 Denim
9 Ash

Did you know? An ocean platform gives a returning booster a place to land downrange, along its path after launch. NASA has recorded Falcon 9 first stages landing on drone ships. Bringing a stage back makes it possible to prepare that stage for another flight.

Capsule Splashdown

How does a capsule slow down before splashdown?

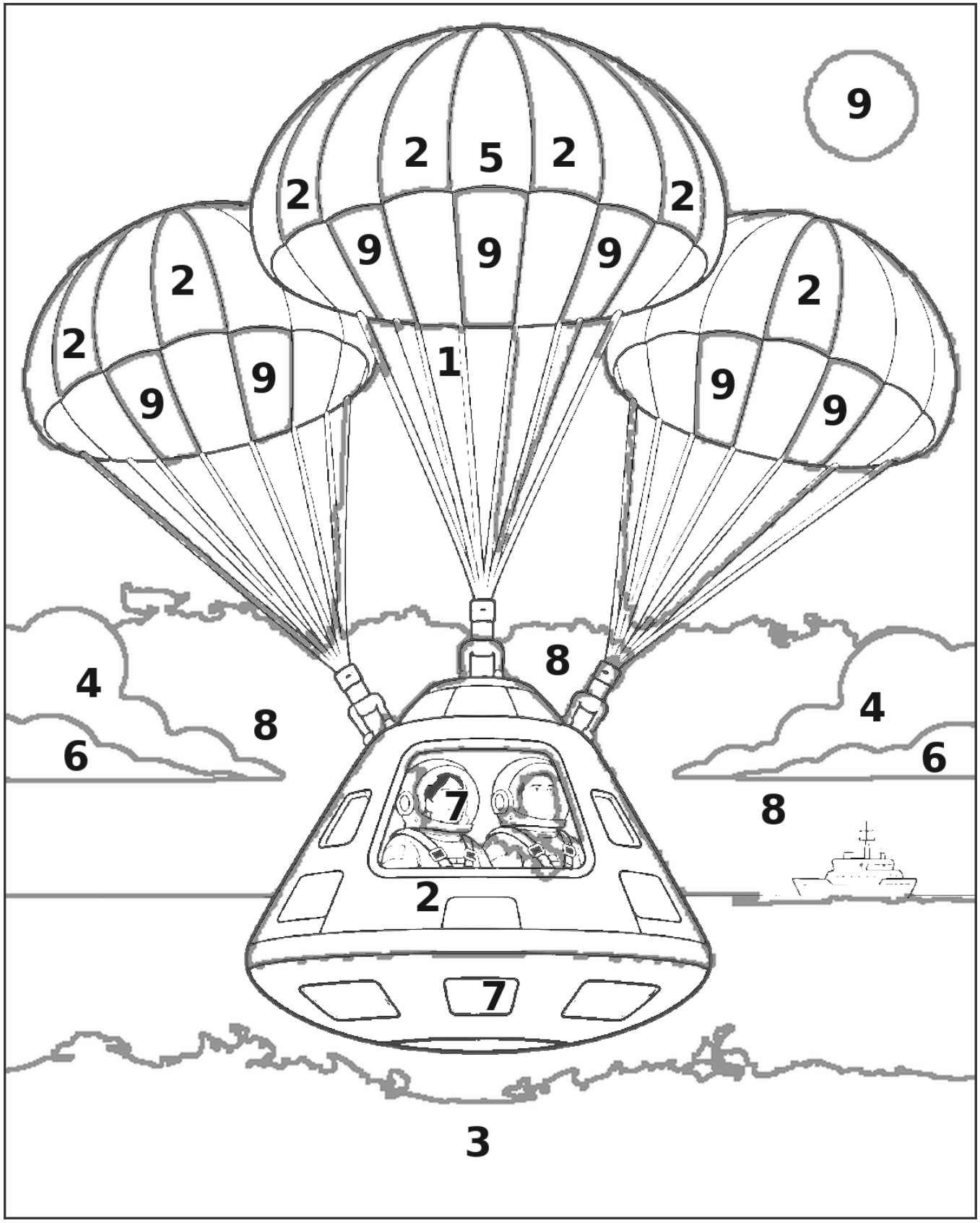

1 Slate
2 Cream
3 Plum
4 Ivory
5 Rust
6 Sky
7 Denim
8 Lagoon
9 Oat

Did you know? Parachutes spread out and catch the air. Smaller chutes can help steady and slow the capsule first. Orion uses three large main parachutes for the final part of the ride before it reaches the water.

Orbital Docking

How do two spacecraft join while they are moving?

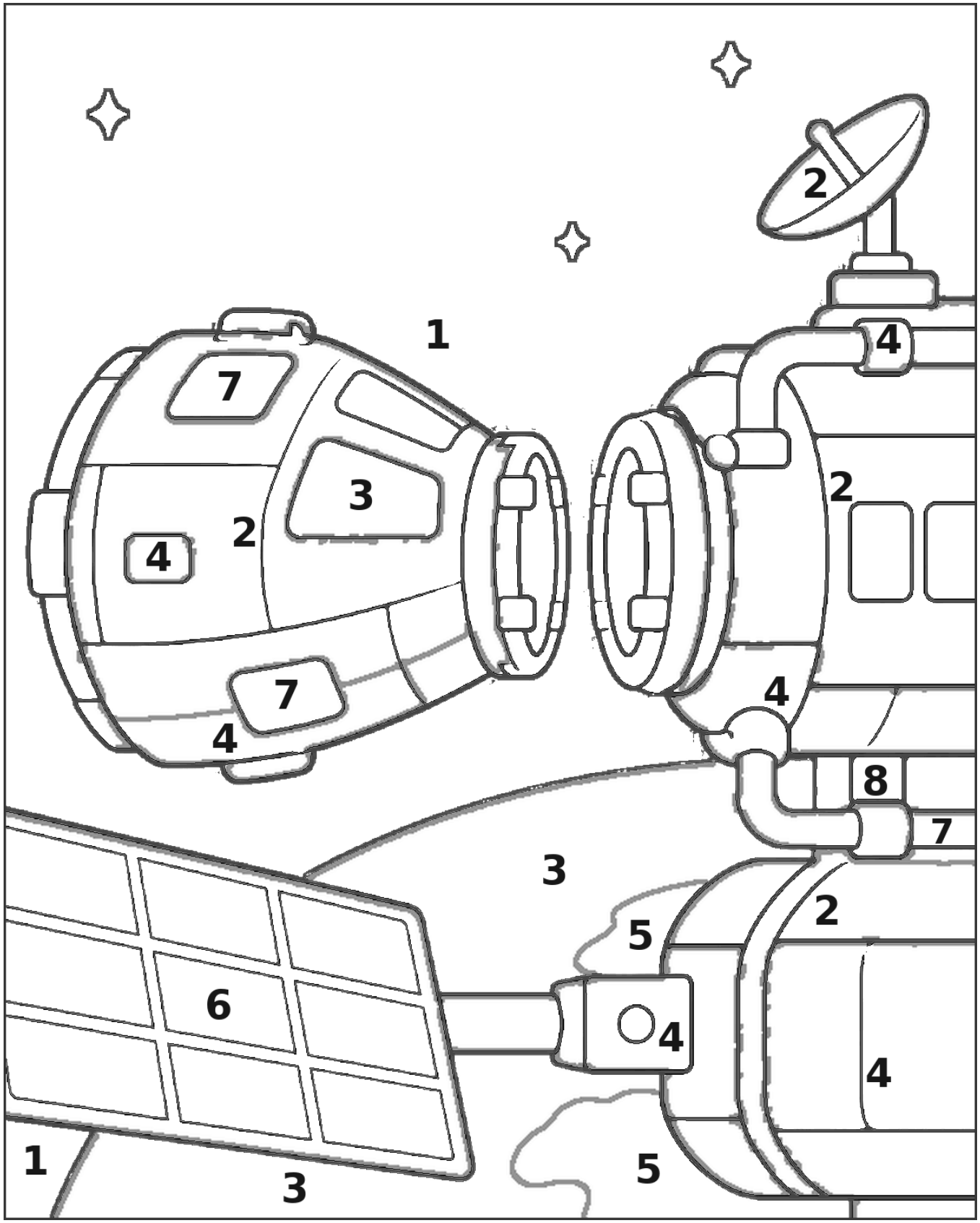

1 Charcoal
2 Snow
3 Denim
4 Lilac
5 Sage
6 Plum
7 Gold
8 Mauve

Did you know? A visiting spacecraft matches the station’s motion, then approaches its docking port slowly. A docking system catches and secures the two craft. A seal around the join keeps air inside the passage when the hatches are opened.

Orbital Spacewalk

What keeps a spacewalker from floating away?

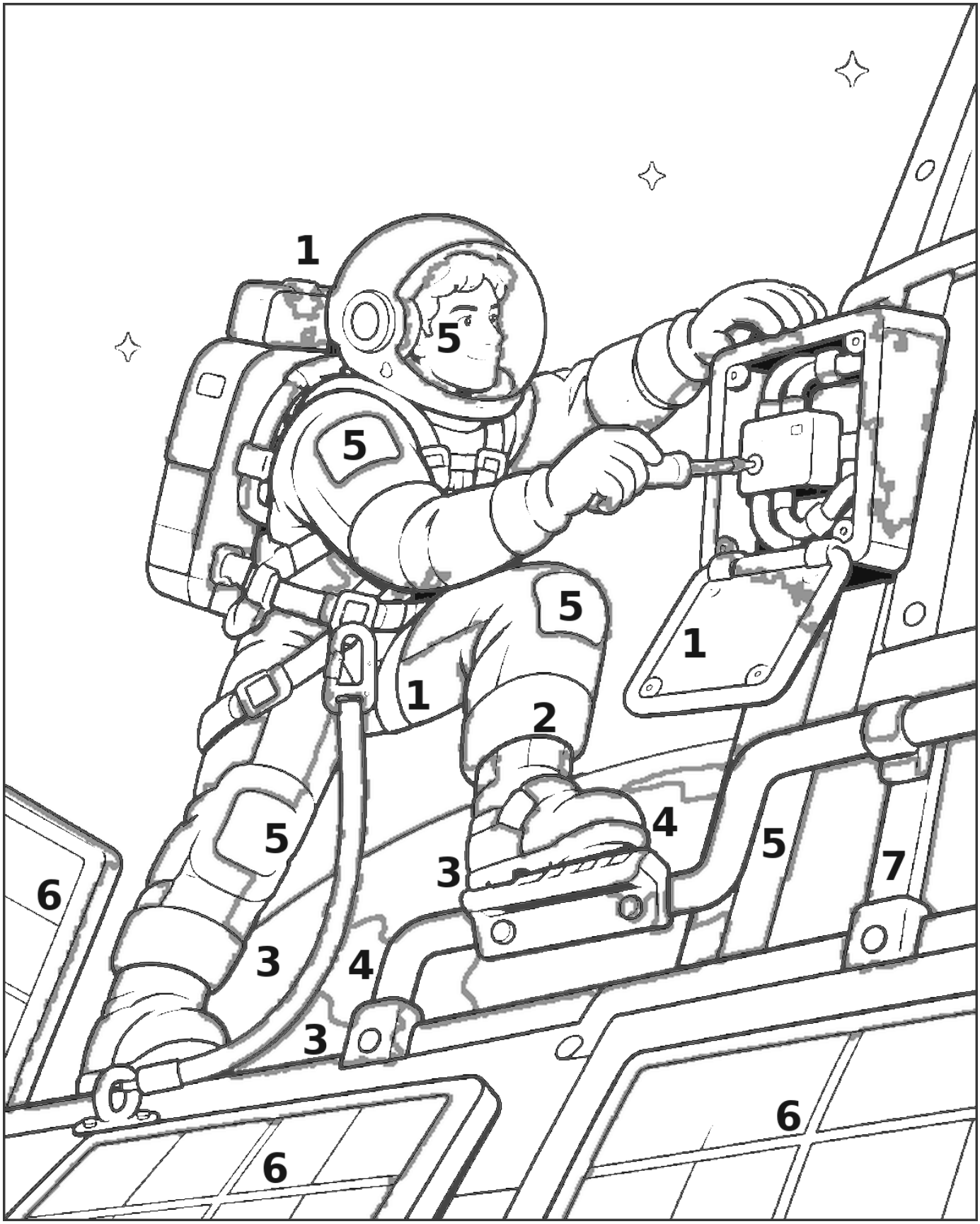

1 Plum
2 Parchment
3 Denim
4 Sage
5 Gold
6 Berry
7 Dusk

Did you know? A strong safety line called a tether clips the astronaut to the spacecraft. Handrails give the astronaut a way to move along the outside. Tools can have tethers of their own.

Robotic Arm

How does a robot hand catch a spacecraft?



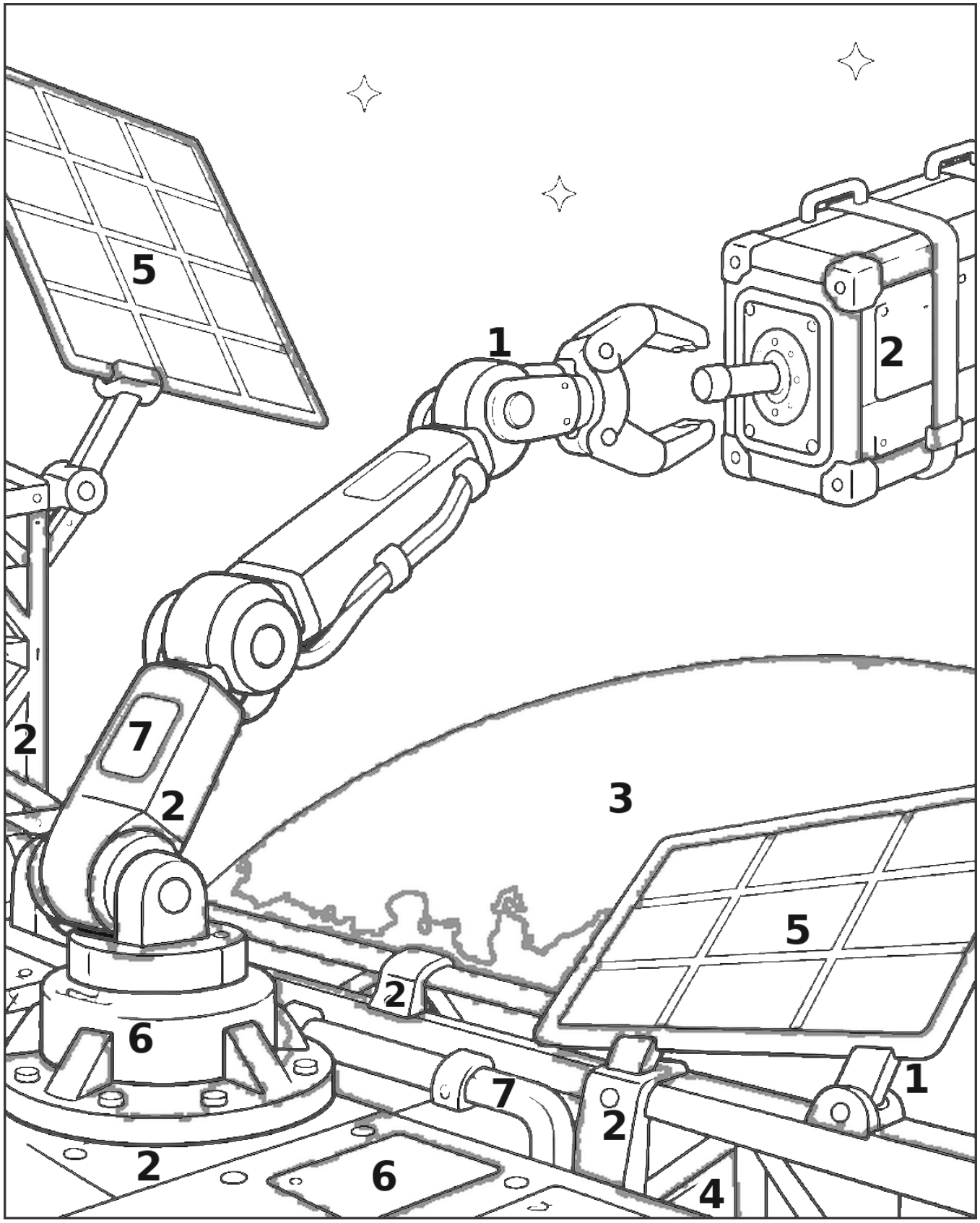

1 Charcoal
2 Parchment
3 Sage
4 Dusk
5 Plum
6 Periwinkle
7 Gold

Did you know? An astronaut can guide the station’s robotic arm toward a fitting on a visiting cargo craft. The arm closes around that fitting and holds the craft steady. The arm can then move the craft toward its place on the station.

Plants in Orbit

How do astronauts water plants that float?



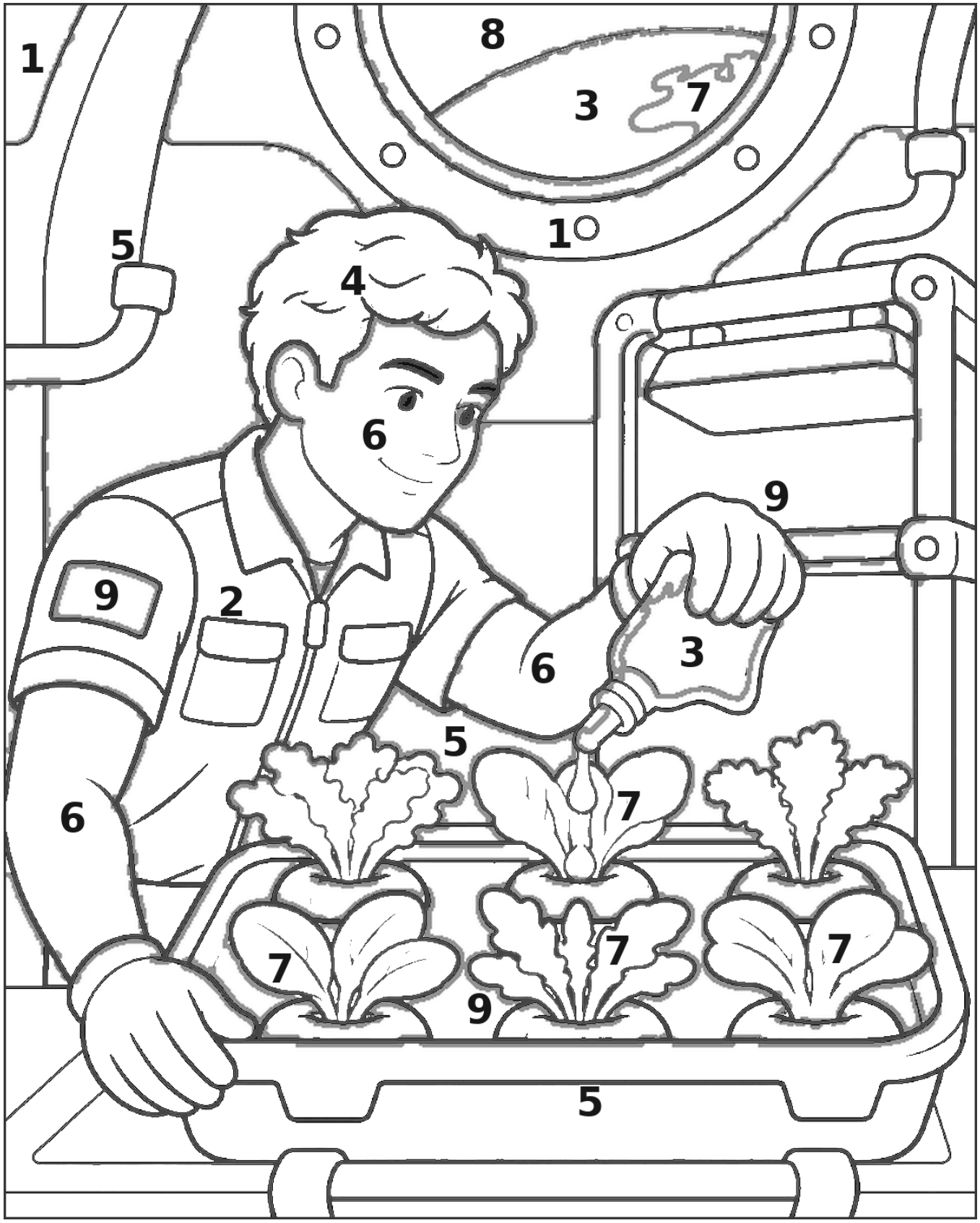

1 Parchment
2 Plum
3 Lagoon
4 Walnut
5 Periwinkle
6 Honey
7 Moss
8 Charcoal
9 Mauve

Did you know? In low gravity, water can clump together or cling to surfaces. The station’s Veggie experiment grows plants in fabric pillows filled with growing material. Wicks help bring water to the roots and leave space for air.

Solar Wings

Why do some satellites unfold wings after launch?

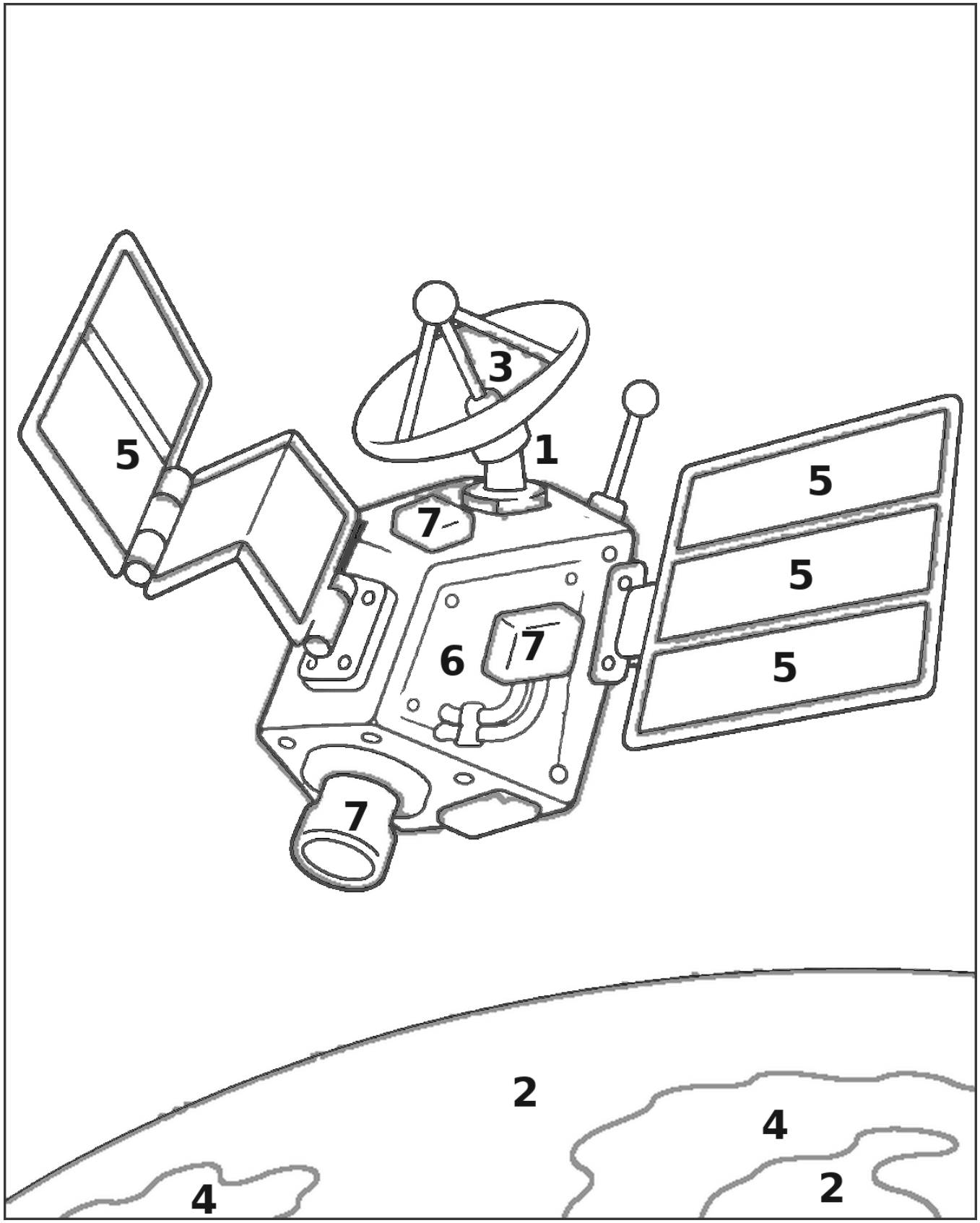

1 Plum
2 Denim
3 Snow
4 Sage
5 Dusk
6 Gold
7 Periwinkle

Did you know? Large solar panels take up a lot of room, so they can ride to space folded against the spacecraft. In orbit the panels spread out to catch sunlight. They supply electricity and can charge a battery for times when the spacecraft is in shadow.

Lunar Landing

How does a lander slow down where there is almost no air?

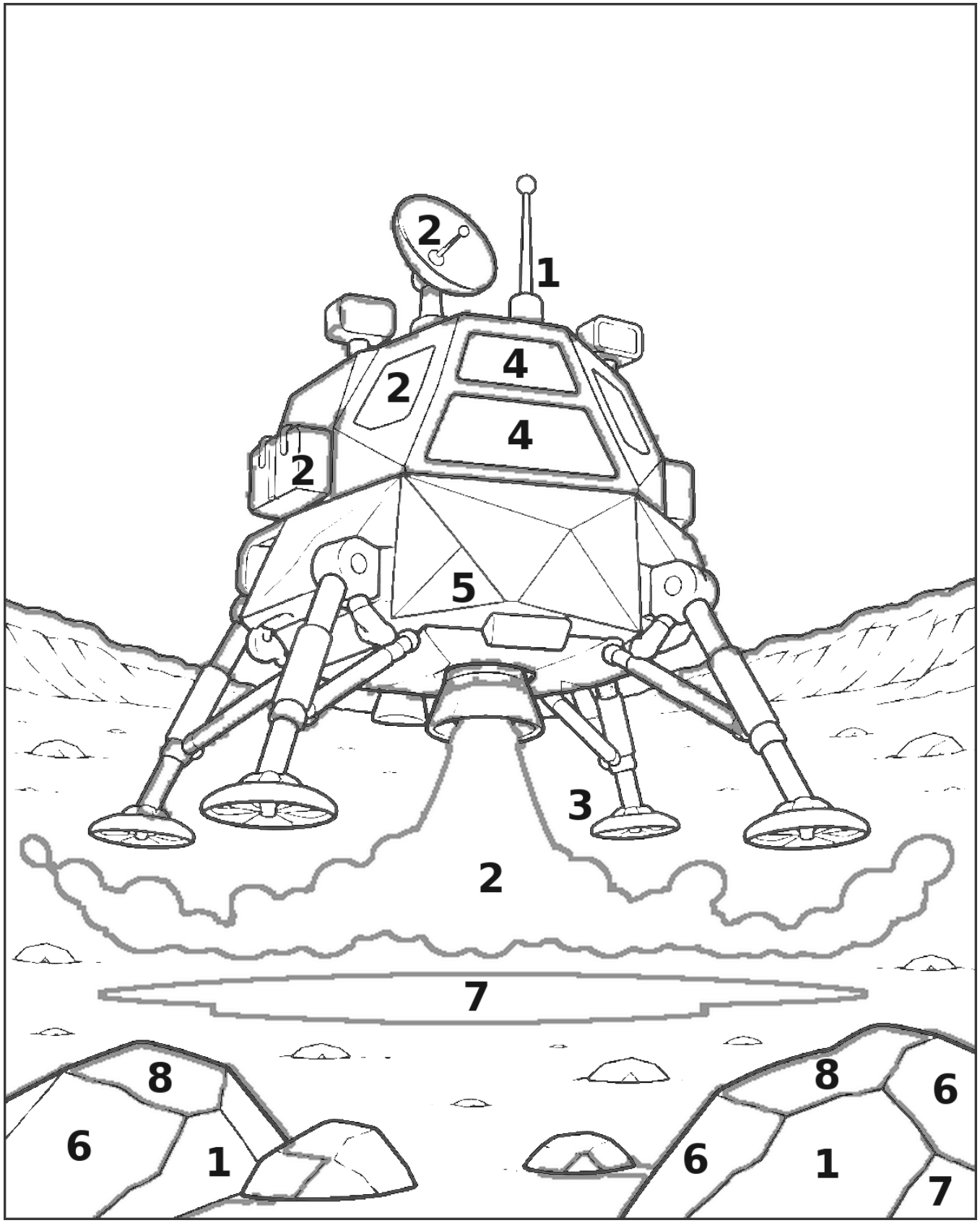

1 Plum
2 Parchment
3 Lilac
4 Lagoon
5 Gold
6 Dusk
7 Charcoal
8 Periwinkle

Did you know? Parachutes need air to slow a vehicle. The Apollo lunar module used an engine pointed toward the lunar ground. The crew could change its thrust while finding a place to land and lowering the craft onto its four legs.

Lunar Fieldwork

What can a rock tell us about the Moon?



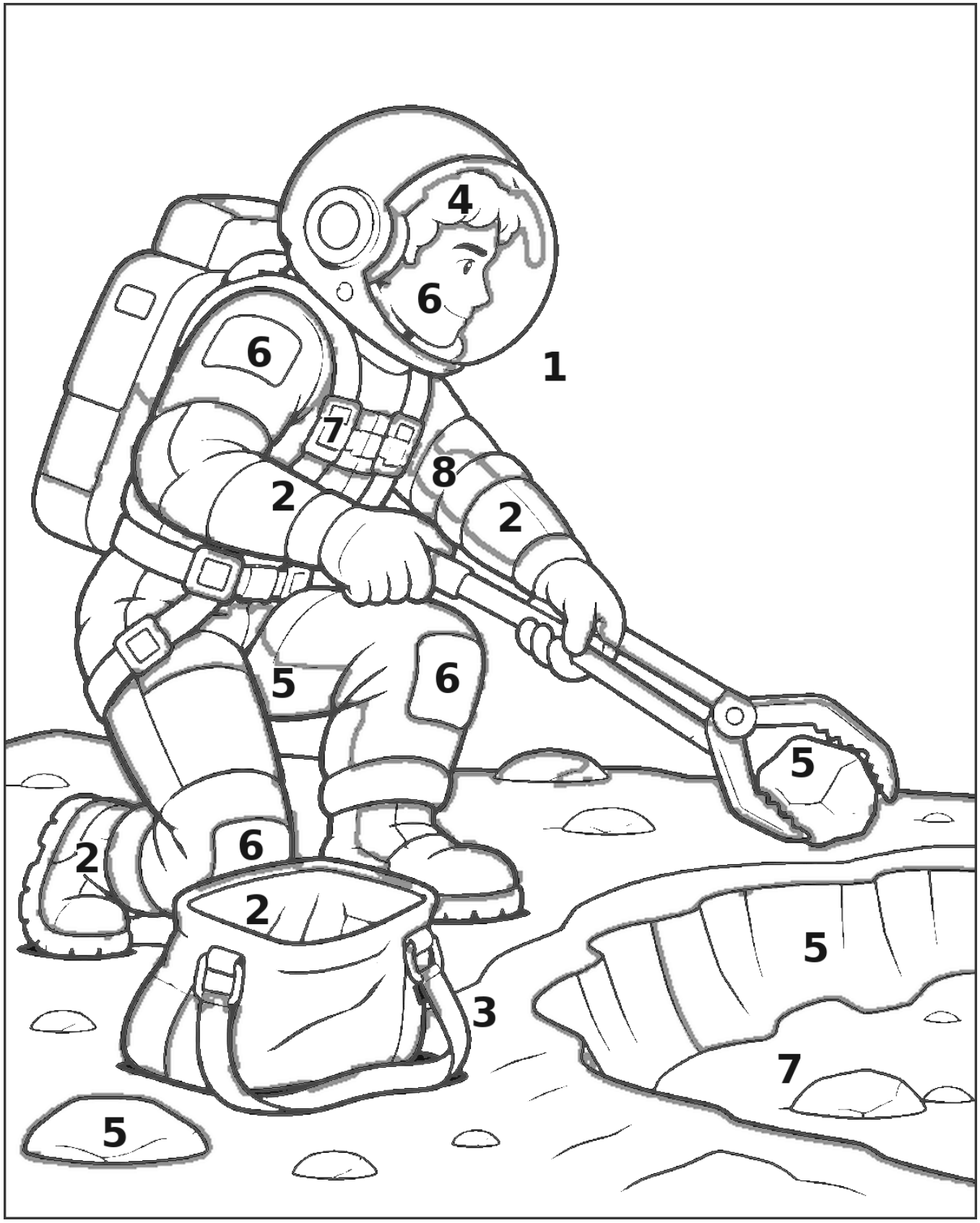

1 Charcoal
2 Parchment
3 Lilac
4 Cocoa
5 Mauve
6 Honey
7 Plum
8 Blush

Did you know? The minerals inside lunar samples help scientists reconstruct the Moon’s history. Some ancient samples record how its crust formed. Other rocks can reveal how lava flowed or how a powerful impact changed the surface.

Moon Rover

Why did Apollo rovers use wire-mesh wheels?



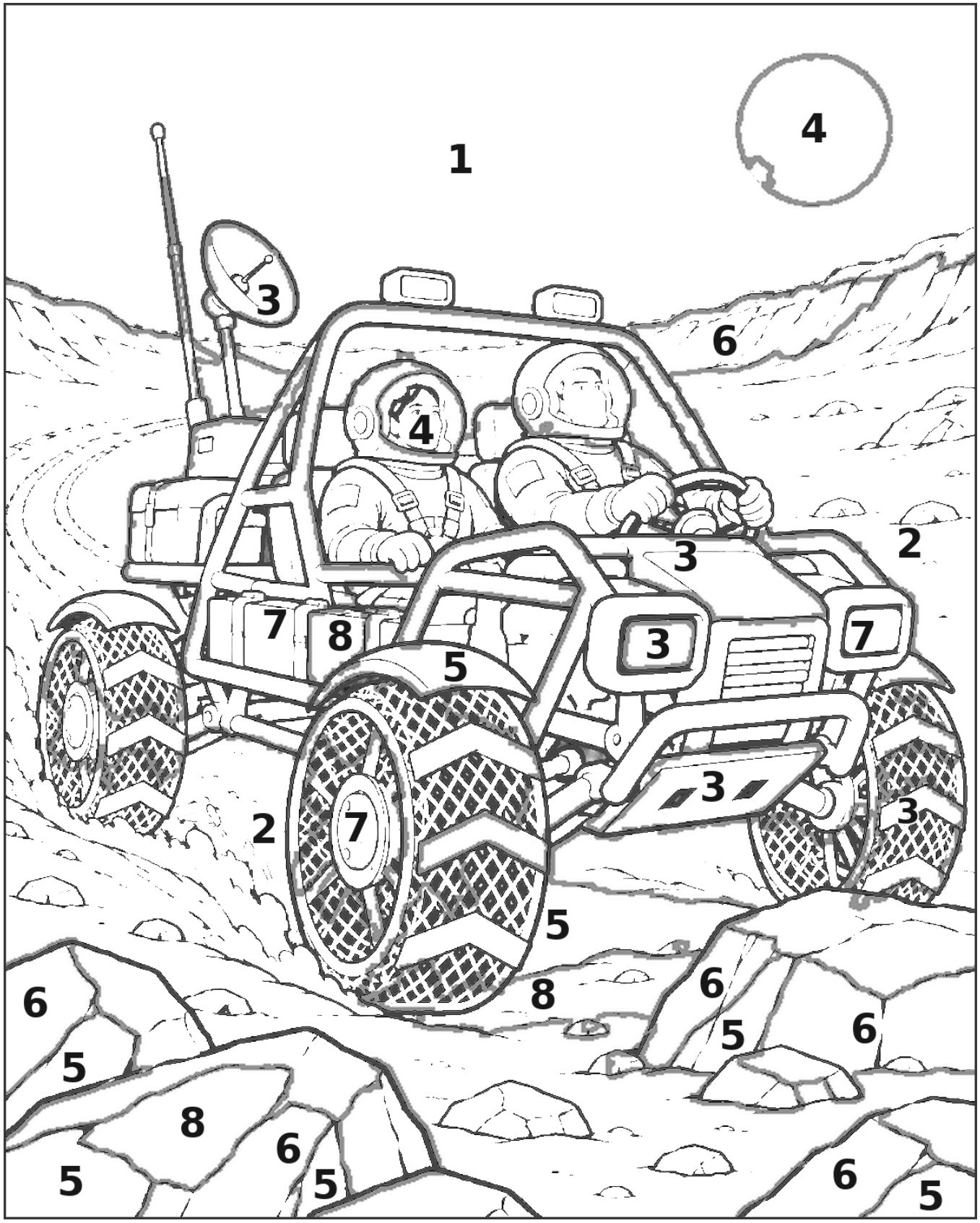

1 Charcoal
2 Lilac
3 Cream
4 Denim
5 Plum
6 Mauve
7 Honey
8 Periwinkle

Did you know? Wire mesh made the real Apollo rover wheels lighter than conventional rubber wheels. The mesh could bend as it rolled over bumps, while strips across the wheels improved grip on soft lunar soil.

Lunar Polar Base

Why can ice survive in some craters near the Moon’s south pole?

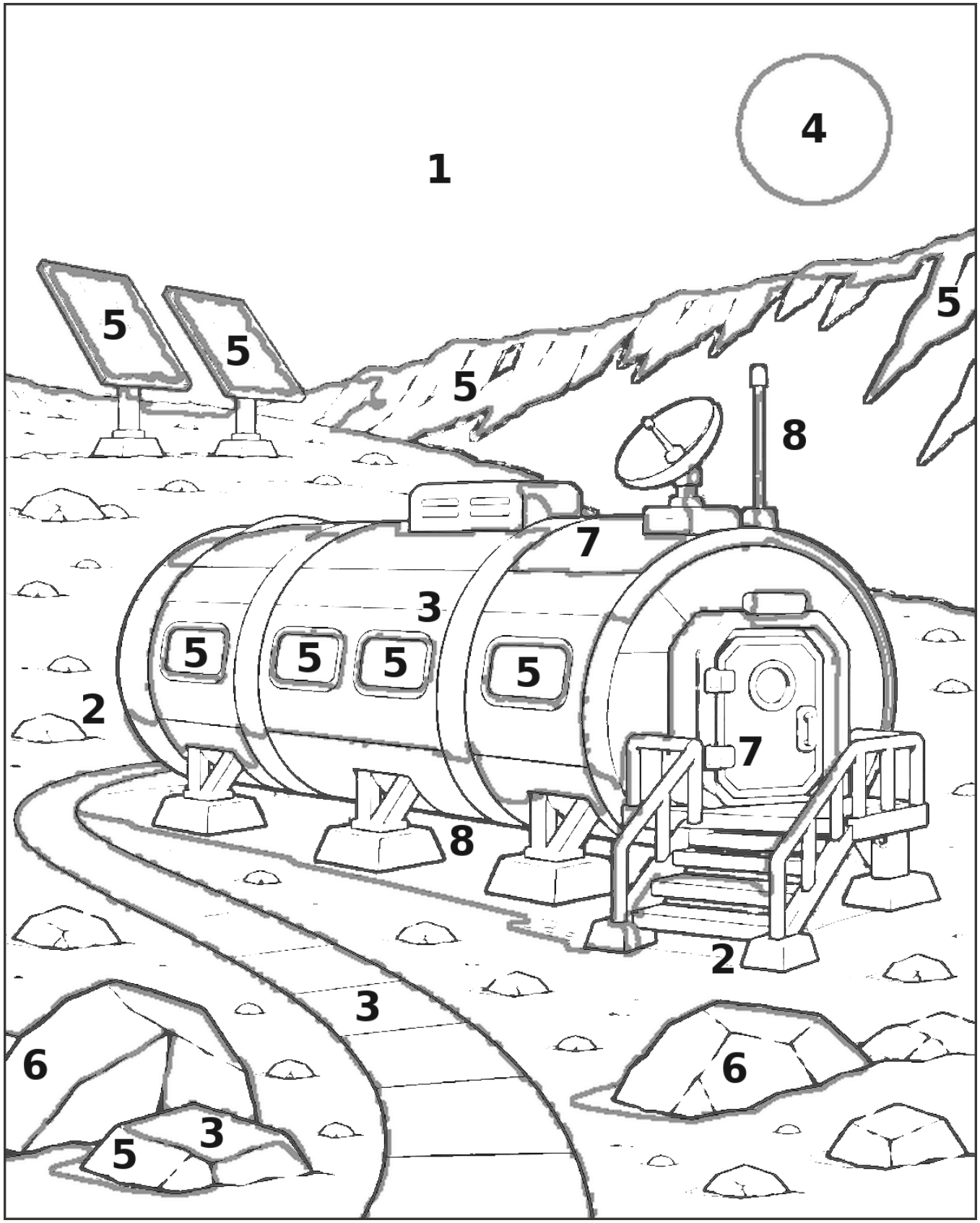

1 Berry
2 Periwinkle
3 Pearl
4 Denim
5 Plum
6 Dusk
7 Cream
8 Charcoal

Did you know? Near the lunar south pole the Sun hangs low over the horizon. Some crater floors stay in shadow all year and become extremely cold. In some of these places, water can stay frozen for a very long time.

Earthrise

How did the Apollo 8 crew see Earth rise over the Moon?

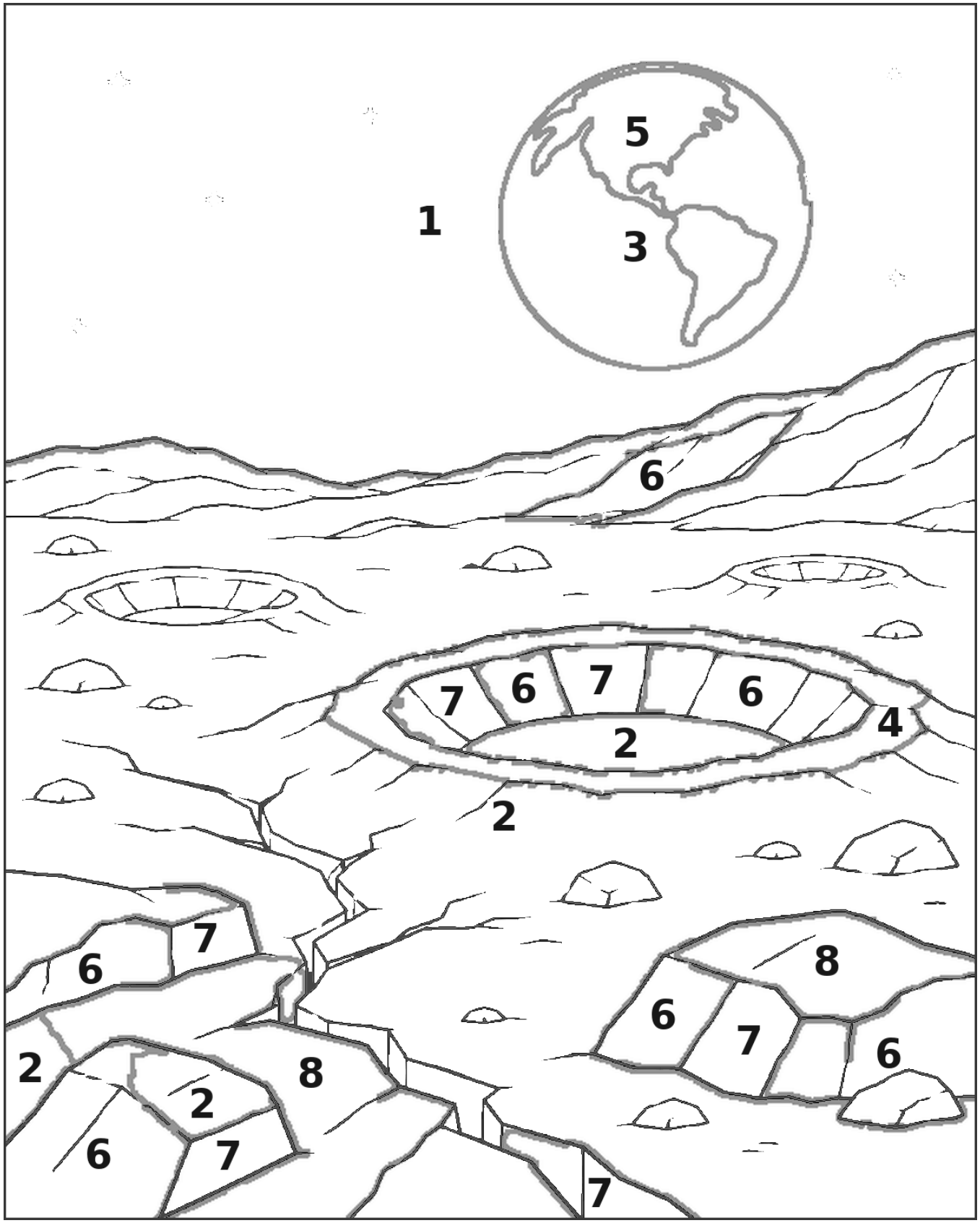

1 Charcoal
2 Lilac
3 Teal
4 Parchment
5 Sage
6 Dusk
7 Plum
8 Periwinkle

Did you know? Apollo 8 was moving around the Moon. As the spacecraft came around the far side, the astronauts saw Earth come into view above the lunar horizon. William Anders photographed that sight in 1968.

Mars Entry

What protects a spacecraft as it enters Mars’s atmosphere?

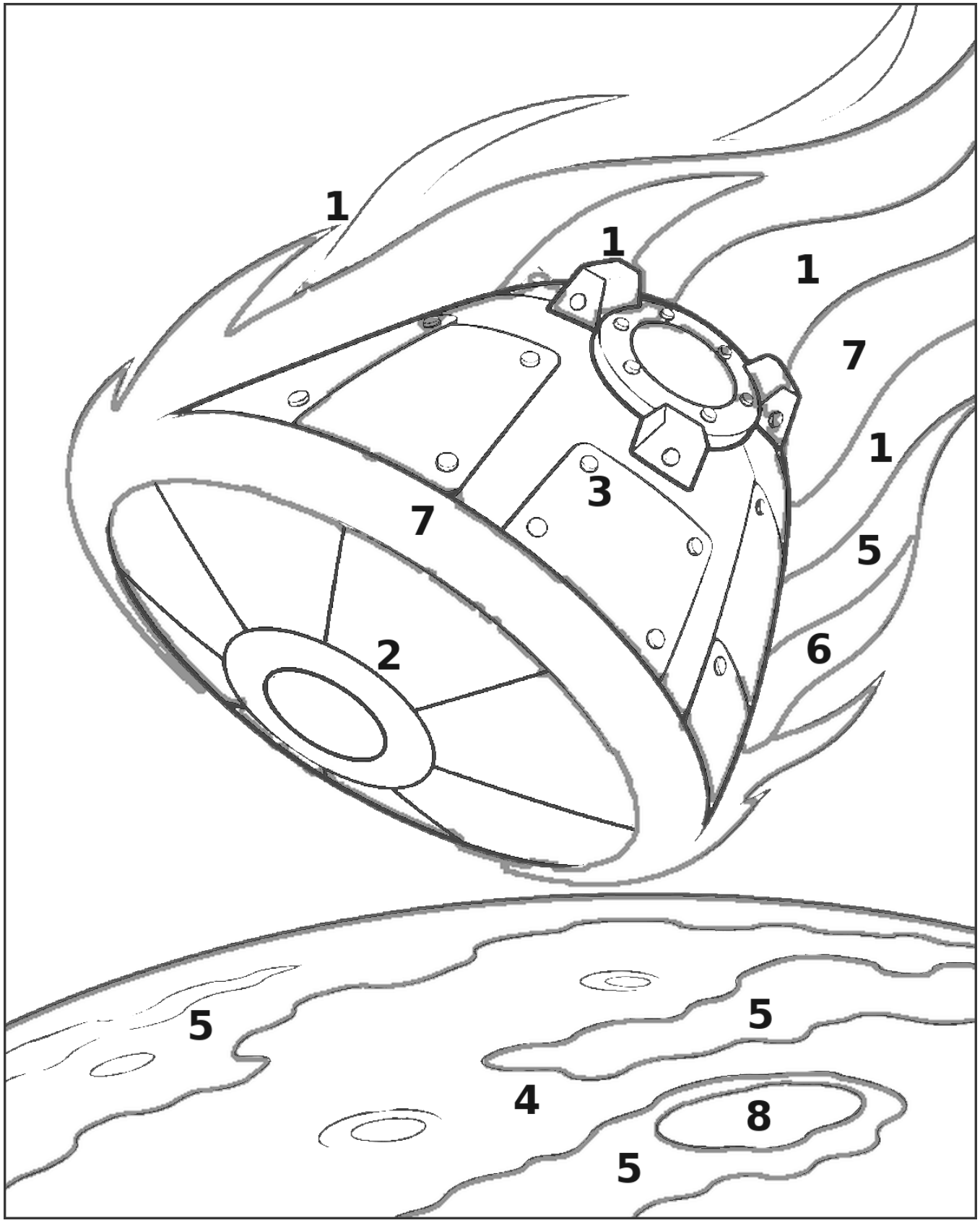

1 Walnut
2 Charcoal
3 Parchment
4 Rust
5 Copper
6 Gold
7 Honey
8 Cocoa

Did you know? A fast spacecraft squeezes and heats the air in front of it as it reaches Mars. A heat shield faces that hot flow and keeps the spacecraft’s equipment cooler behind it. Engineers design the shield for the hottest part of the descent.

Mars Rock Drill

How does a rover take a piece of a rock?



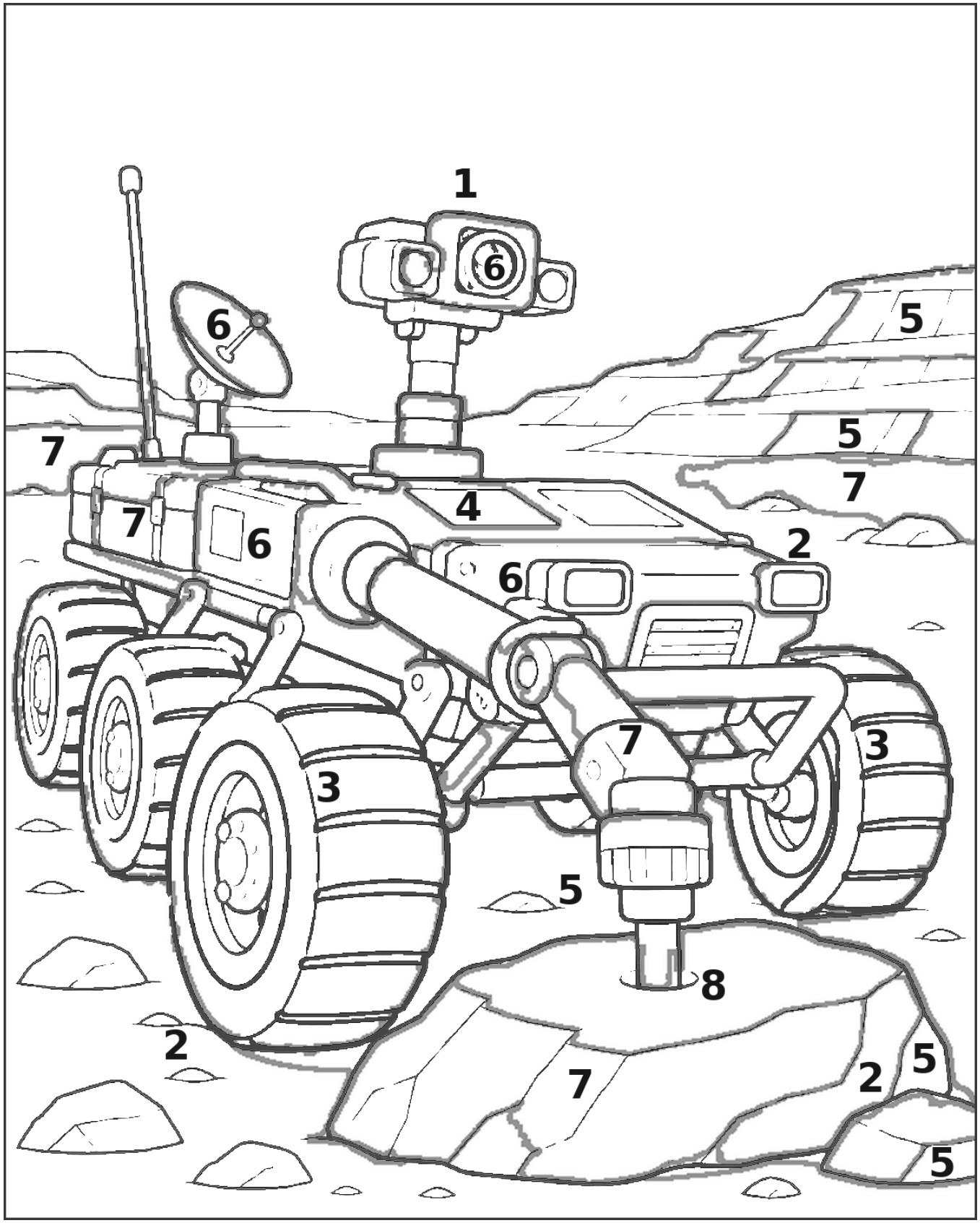

1 Butter
2 Clay
3 Plum
4 Lagoon
5 Rust
6 Cream
7 Copper
8 Gold

Did you know? The Perseverance rover carries a drill on the end of a robotic arm. A hollow bit cuts a small cylinder out of the rock. The rover can move the core into its sampling system, where it is stored in a sealed tube.

Mars Helicopter

Why did Ingenuity’s blades have to spin so fast?

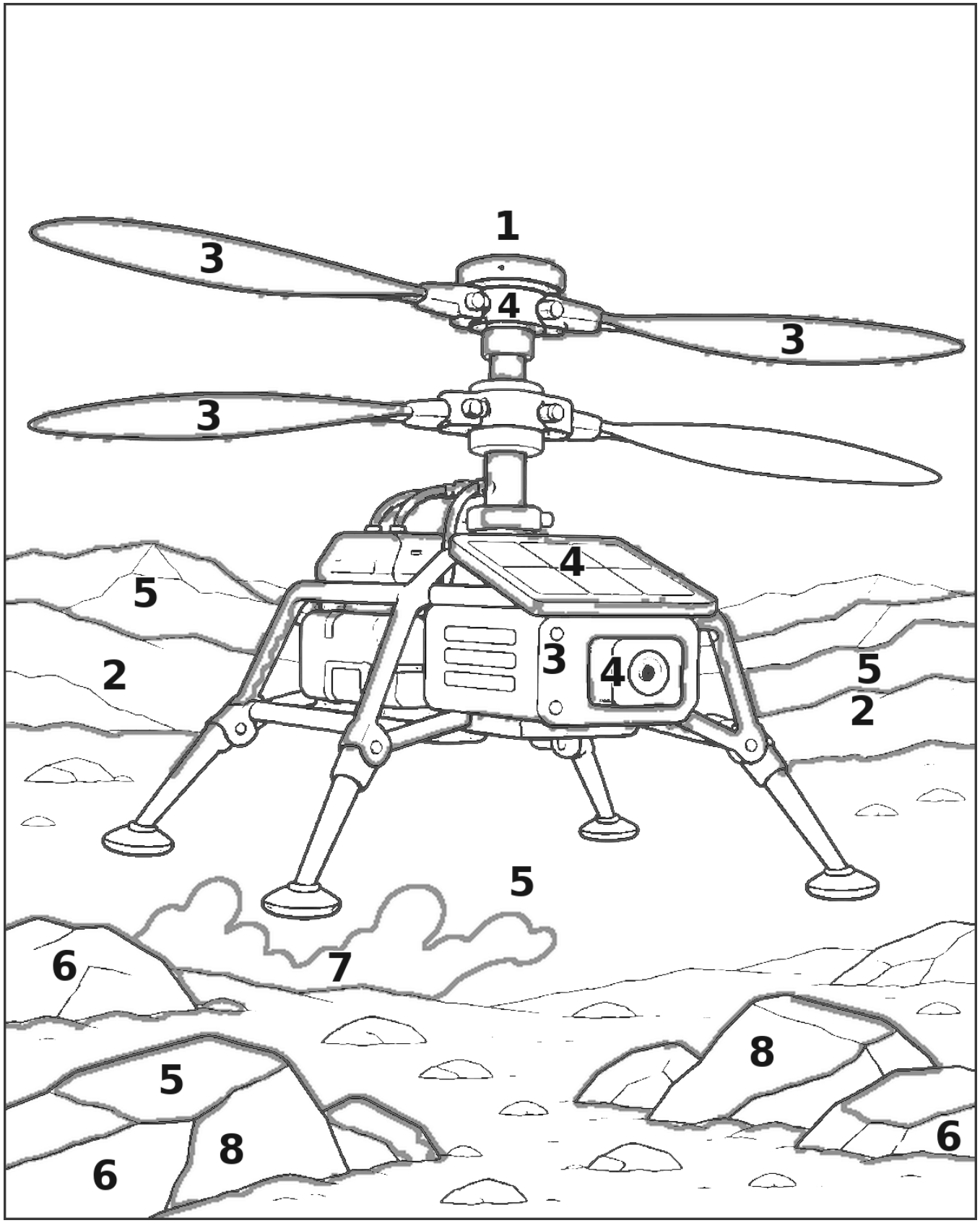

1 Gold
2 Rust
3 Parchment
4 Plum
5 Honey
6 Cocoa
7 Butter
8 Clay

Did you know? Mars’s atmosphere is much thinner than Earth’s. There is less air for rotor blades to push downward, so Ingenuity used two large, fast rotors to lift its very light body. In 2021 it made the first powered flight on another planet.

Martian Dust Devil

How does a dust devil make itself visible?



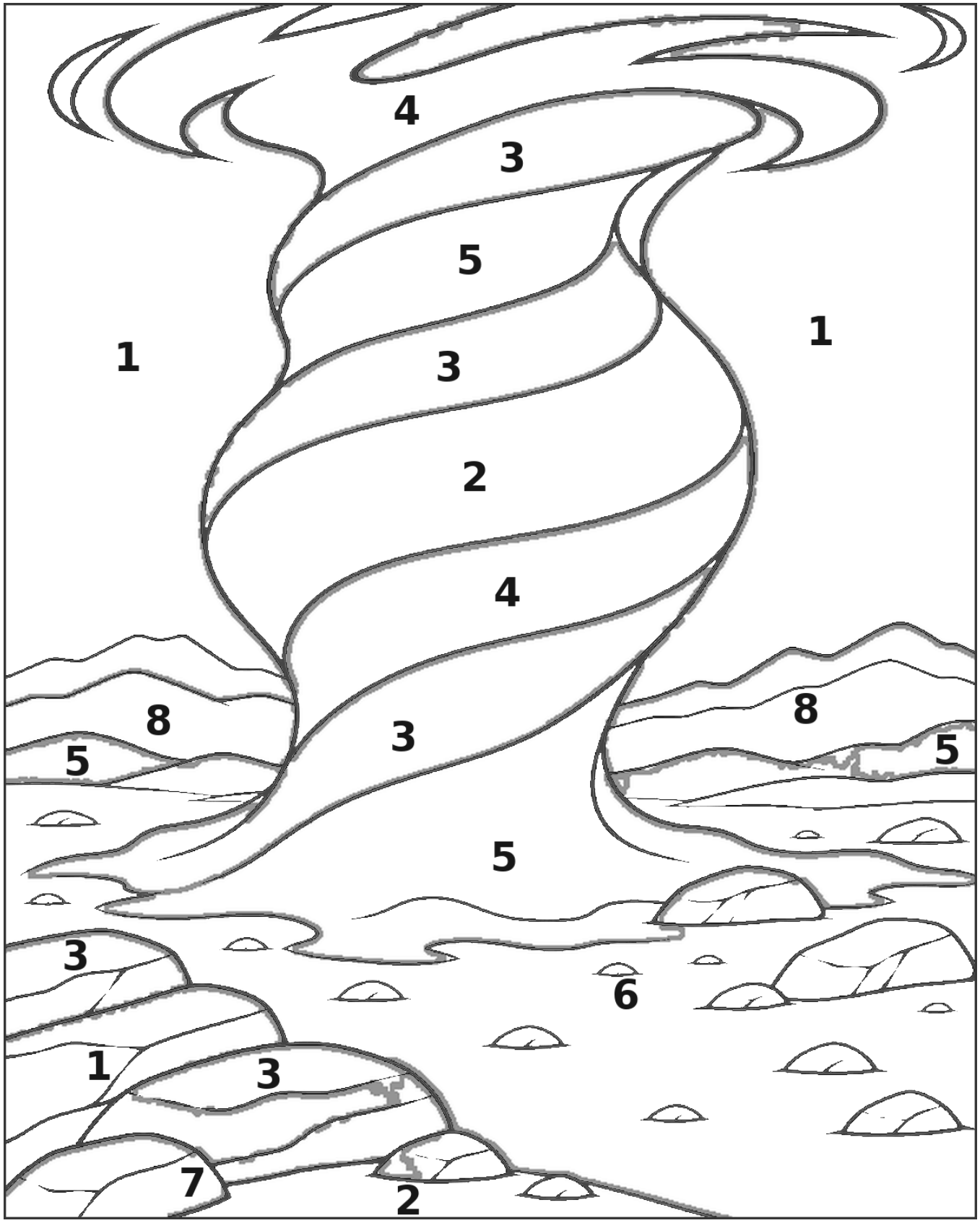

1 Mauve
2 Rust
3 Peach
4 Honey
5 Apricot
6 Copper
7 Plum
8 Dusk

Did you know? Sunlight warms the ground, which warms the air just above it. Rising air can start spinning and pick up loose dust. The dust traces the spinning column, so a rover can sometimes see the whirlwind moving across the ground.

Mars Canyon

How big is the giant canyon system on Mars?

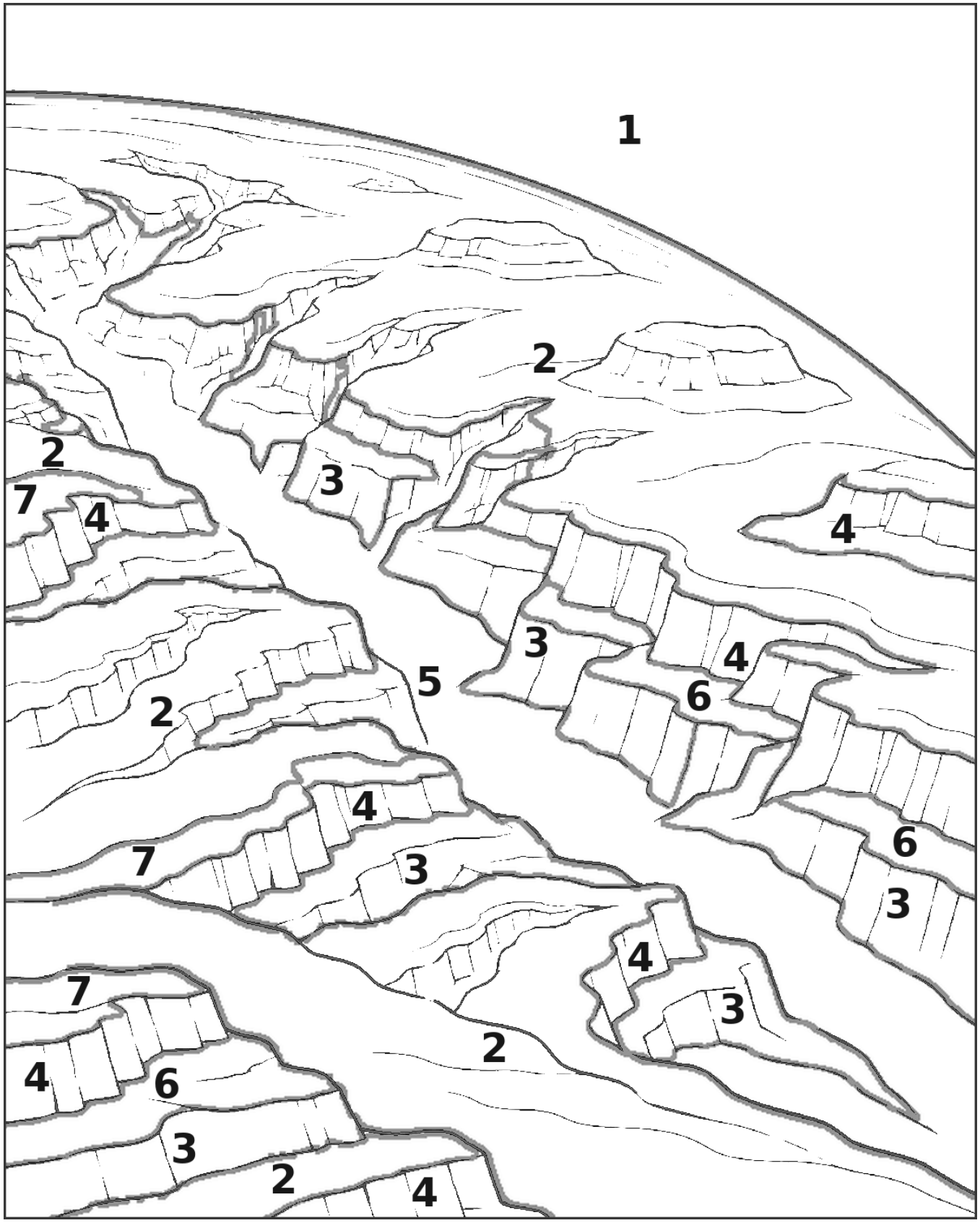

1 Berry
2 Honey
3 Plum
4 Rust
5 Charcoal
6 Rose
7 Peach

Did you know? Valles Marineris stretches roughly 4,000 kilometers across Mars. It has several deep connected valleys. In places its floor lies many kilometers below the ground around it, and its width changes along the way.

Saturn Flyby

What are Saturn’s rings made of?

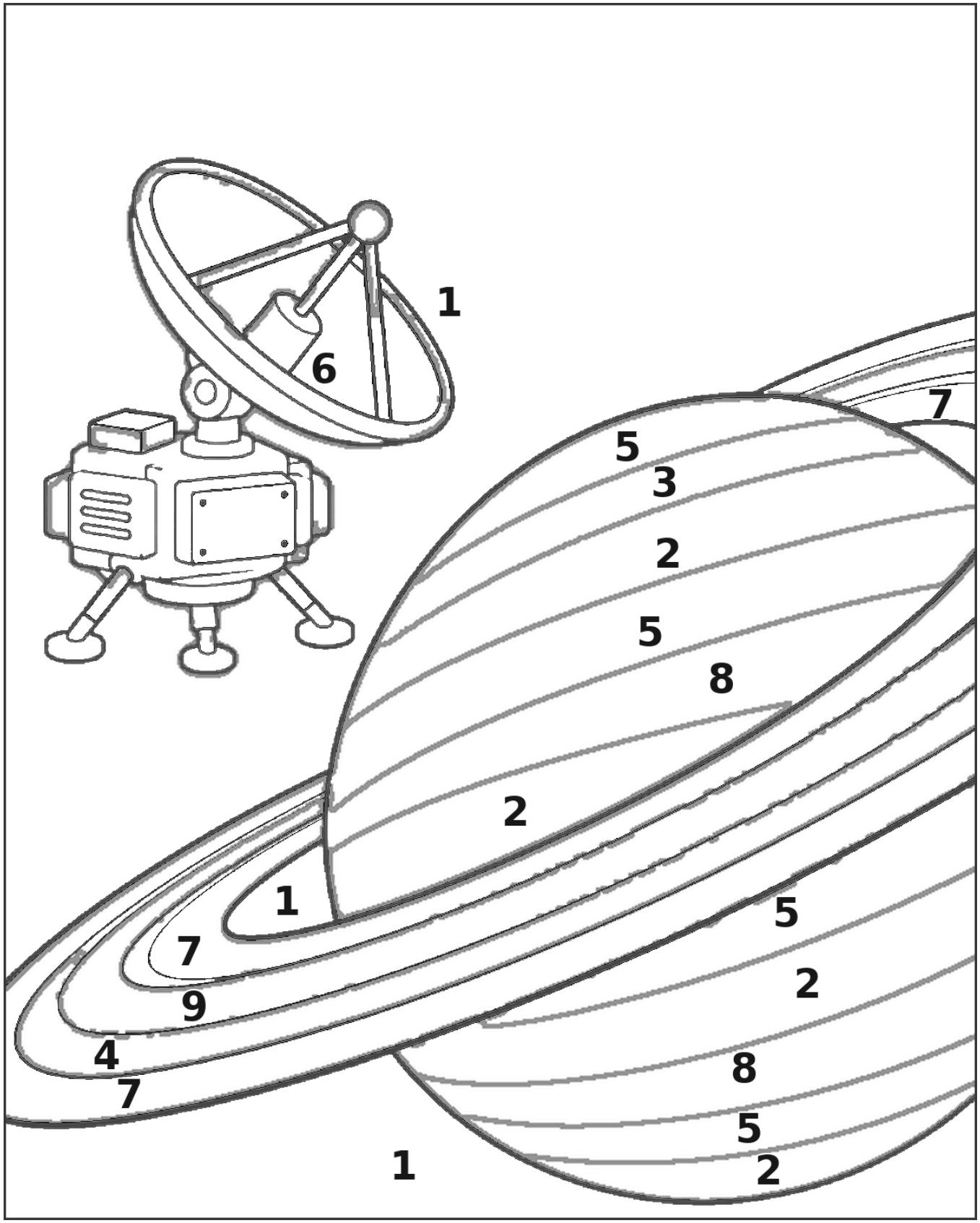

1 Charcoal	**2 Gold**	**3 Ivory**
4 Lilac	**5 Butter**	**6 Parchment**
7 Dusk	**8 Honey**	**9 Cream**

Did you know? Saturn’s rings are made mostly of countless pieces of ice, with some rock and dust. The pieces travel around Saturn in orbits and vary greatly in size. From far away, all these separate pieces look like nearly solid stripes.

Europa’s Cracks

Why is Jupiter’s moon Europa covered with lines?

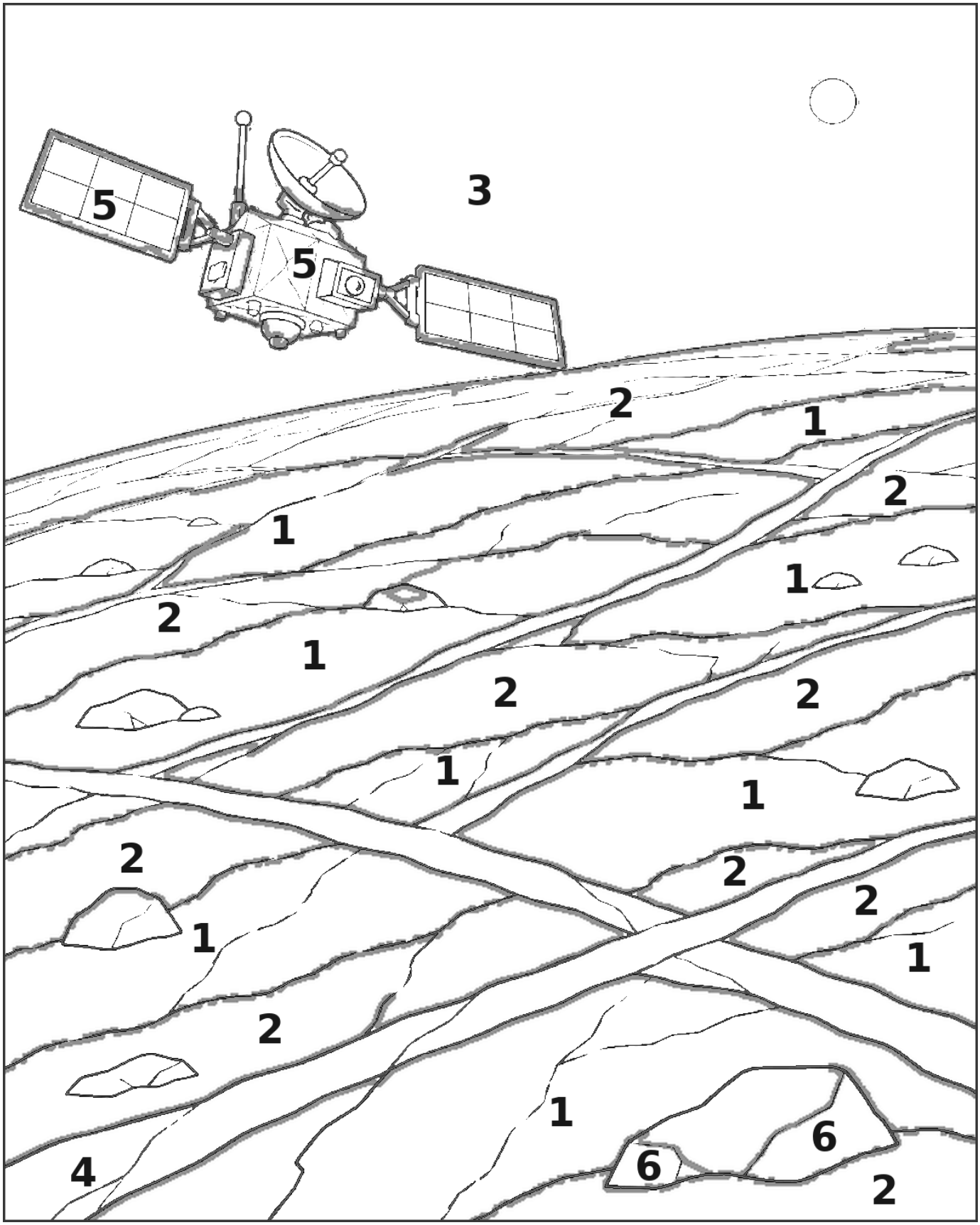

1 Lilac
2 Parchment
3 Charcoal
4 Copper
5 Plum
6 Mauve

Did you know? Europa’s surface is a shell of ice. Its long lines mark ridges and fractures where the ice has moved or cracked. Some darker lines may contain material that reached the surface from within the ice shell.

Asteroid Sample

How can a spacecraft collect gravel without landing?



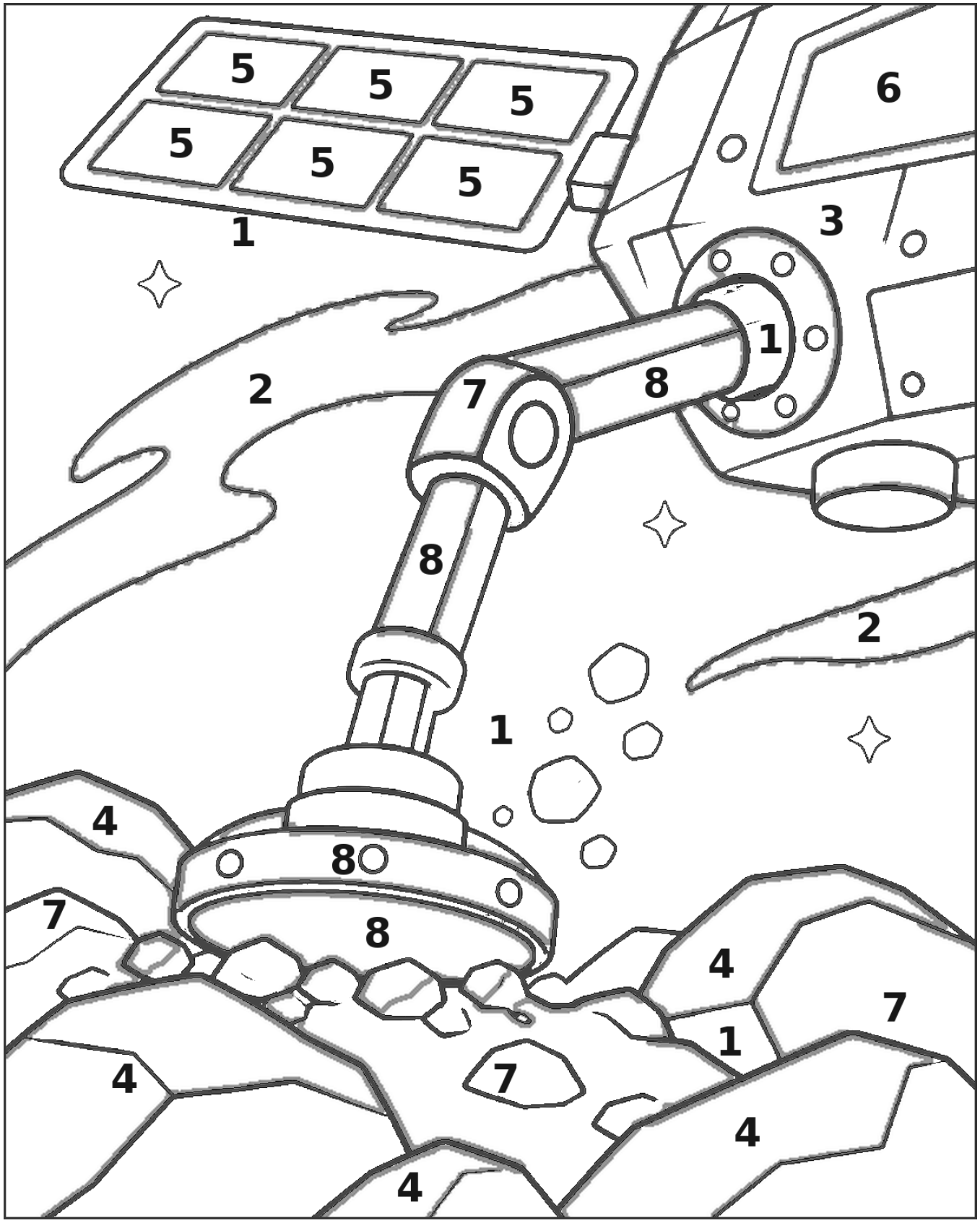

1 Charcoal
2 Sky
3 Gold
4 Ash
5 Dusk
6 Lagoon
7 Plum
8 Lilac

Did you know? OSIRIS-REx briefly touched its sampling head to the asteroid Bennu. A puff of nitrogen gas stirred up pebbles and dust and pushed some into the collector. Then the spacecraft moved away carrying the sample.

Comet Tail

Why does a comet’s tail point away from the Sun?

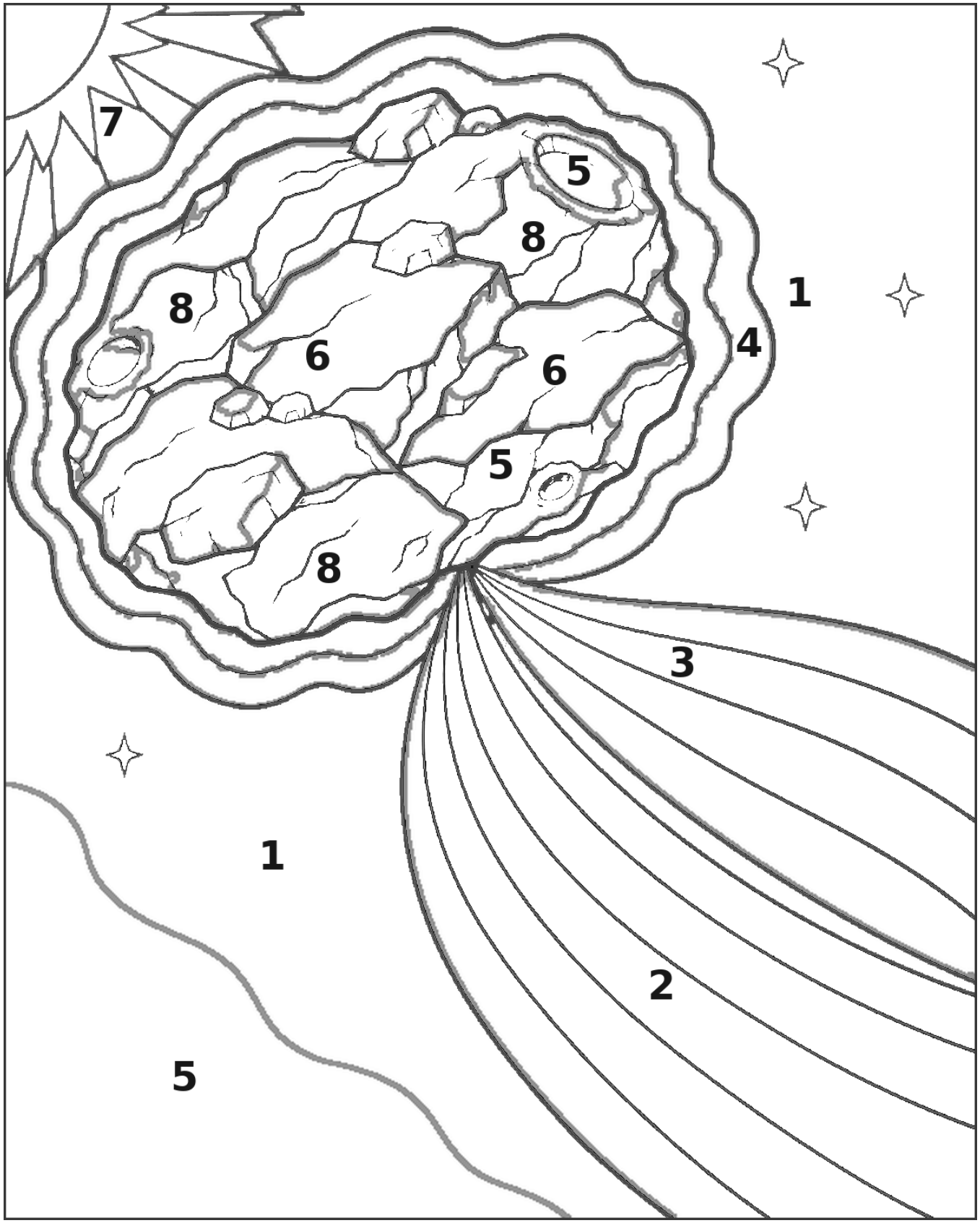

1 Charcoal
2 Peach
3 Lagoon
4 Seafoam
5 Plum
6 Lilac
7 Gold
8 Mauve

Did you know? Near the Sun, some of the comet’s ice turns to gas and releases dust. Sunlight pushes on the dust, and the solar wind sweeps away charged gas. The two tails can point in slightly different directions, but both extend away from the Sun.

Nebula Telescope

Why does Webb have a gold mirror made of pieces?

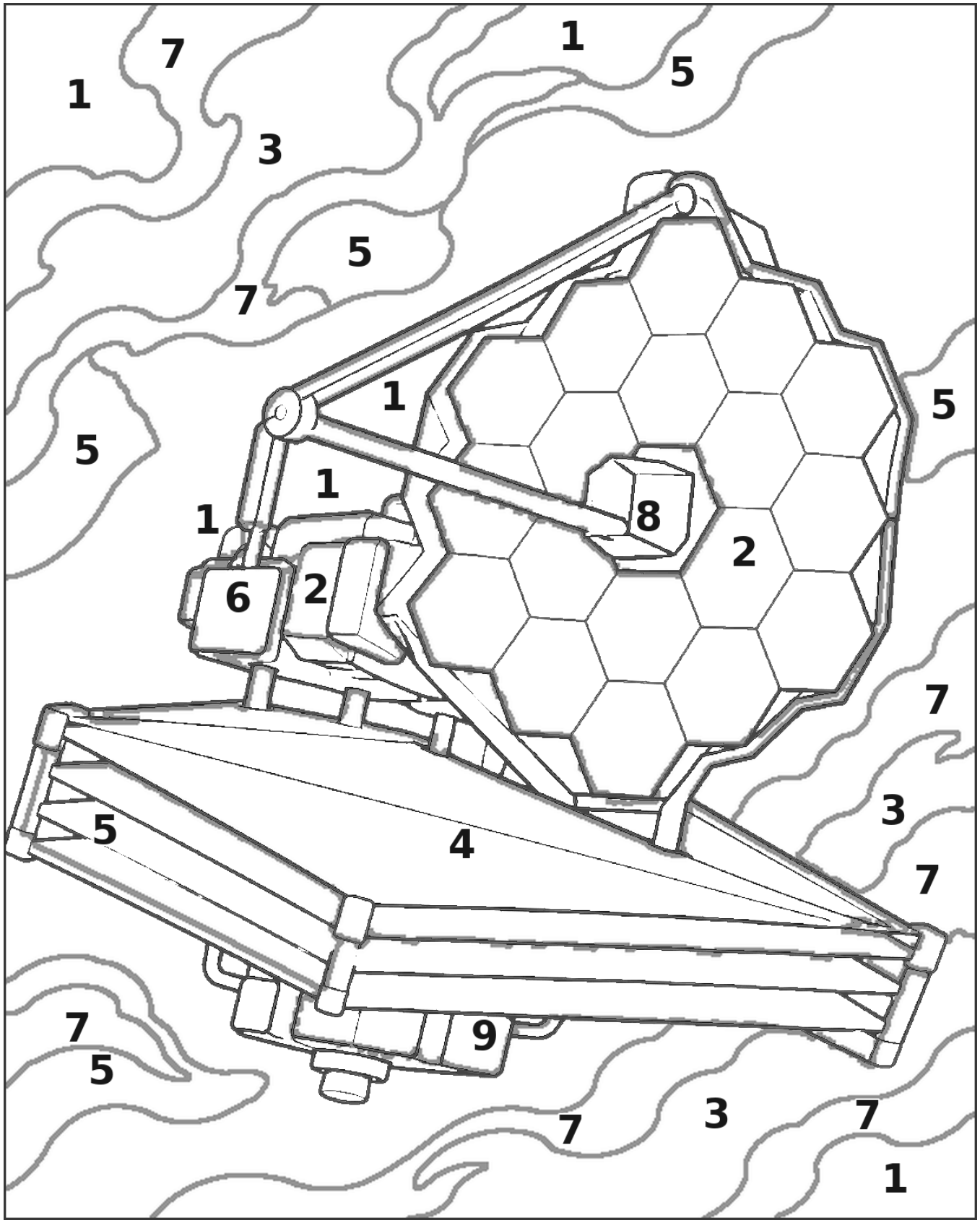

1 Charcoal	**2 Gold**	**3 Rose**
4 Lilac	**5 Mauve**	**6 Pearl**
7 Berry	**8 Plum**	**9 Dusk**

Did you know? Webb’s mirror uses 18 segments that folded for launch and unfolded in space. A thin gold coating reflects infrared light well. Webb can gather this light to study things such as young stars inside dusty clouds.