Robotic Arm

How does a robot hand catch a spacecraft?



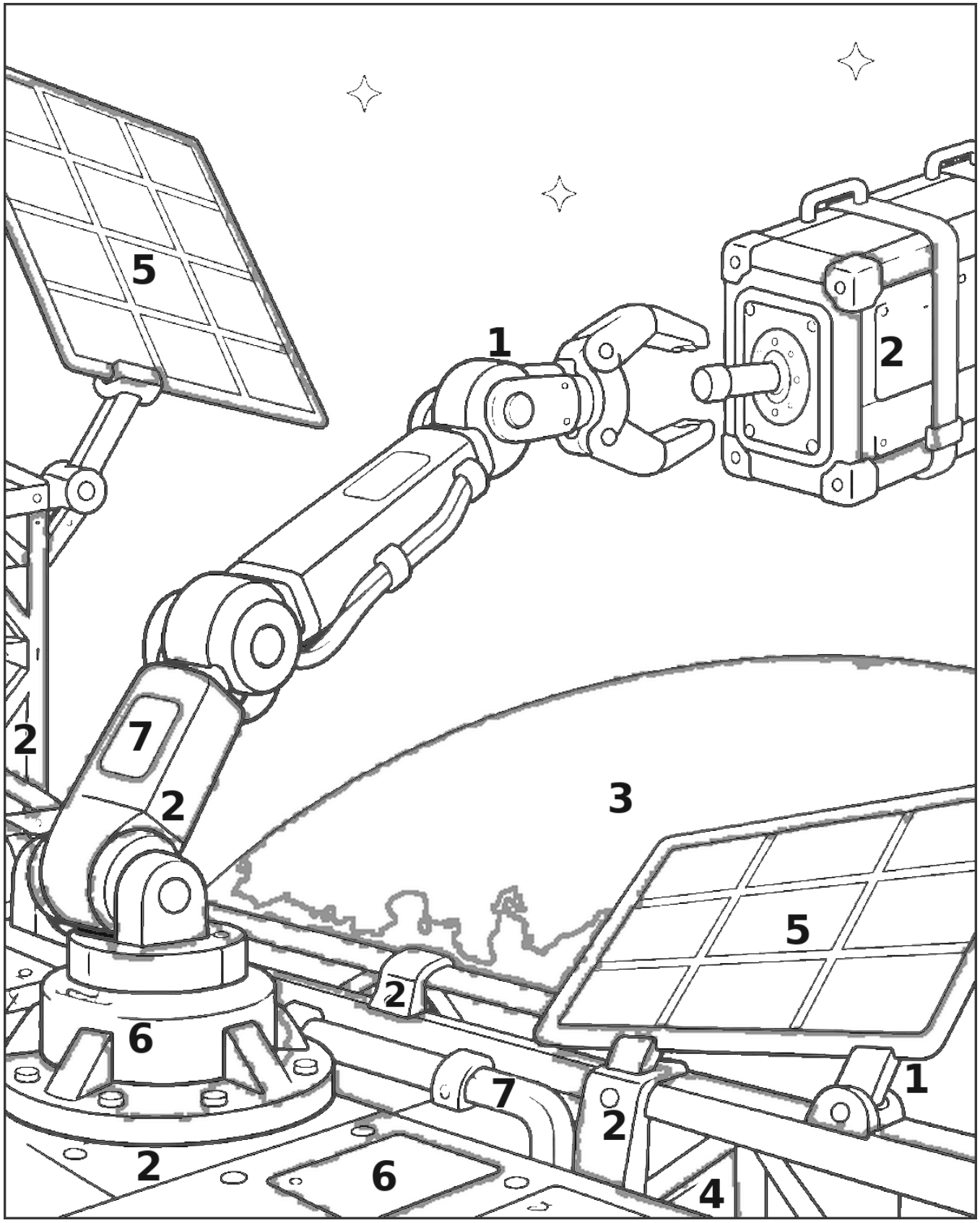

1 Charcoal
2 Parchment
3 Sage
4 Dusk
5 Plum
6 Periwinkle
7 Gold

Did you know? An astronaut can guide the station’s robotic arm toward a fitting on a visiting cargo craft. The arm closes around that fitting and holds the craft steady. The arm can then move the craft toward its place on the station.