Scissor Lift

Why do the arms look like scissors?

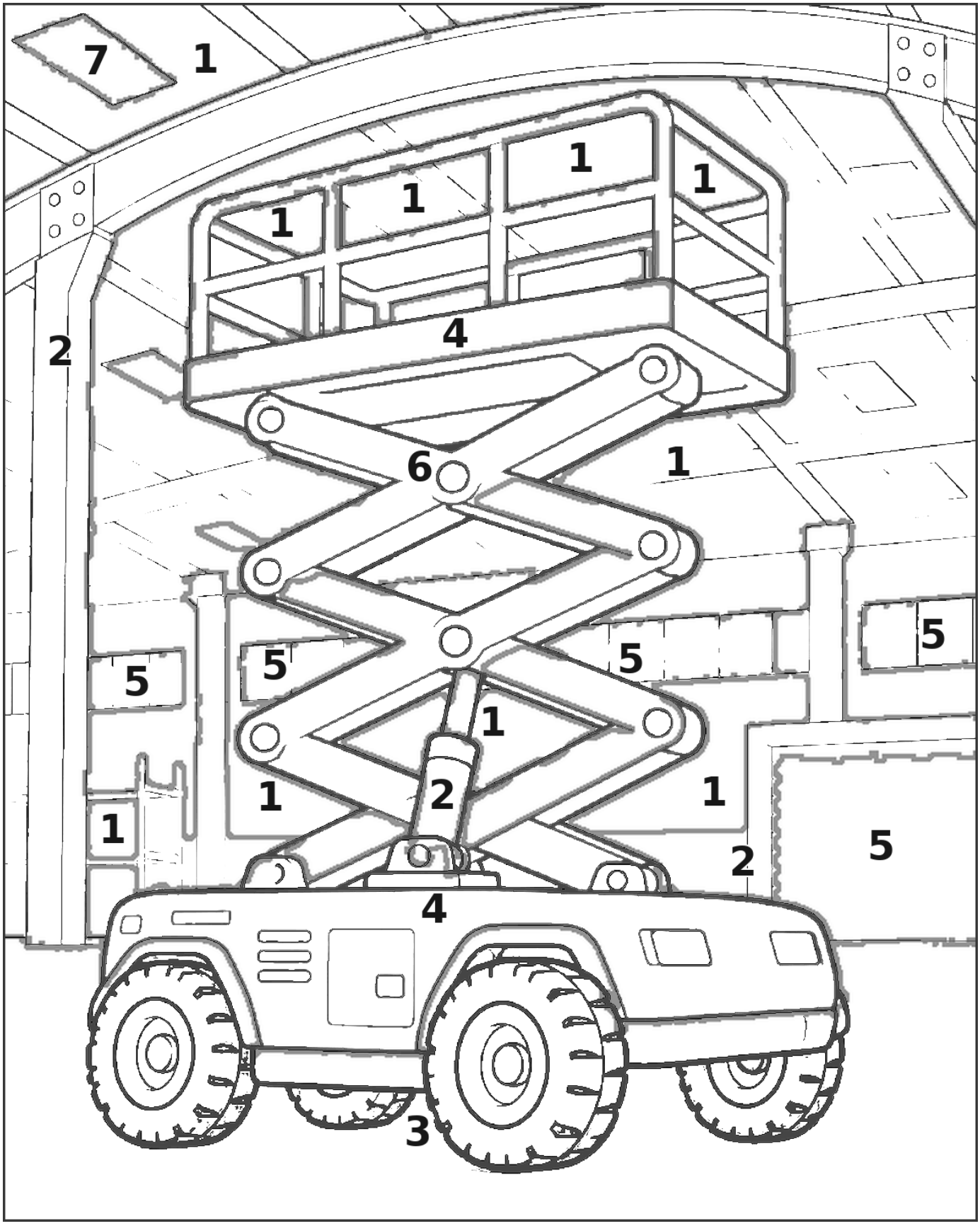

1 Butter
2 Lagoon
3 Ash
4 Sage
5 Sky
6 Meadow
7 Ivory

Did you know? The crossed arms have joints where they meet. When the arms open upward, they raise the platform. When they fold, the platform comes straight back down toward its base.