Rally on Gravel

Why do gravel rally tires have chunky tread?



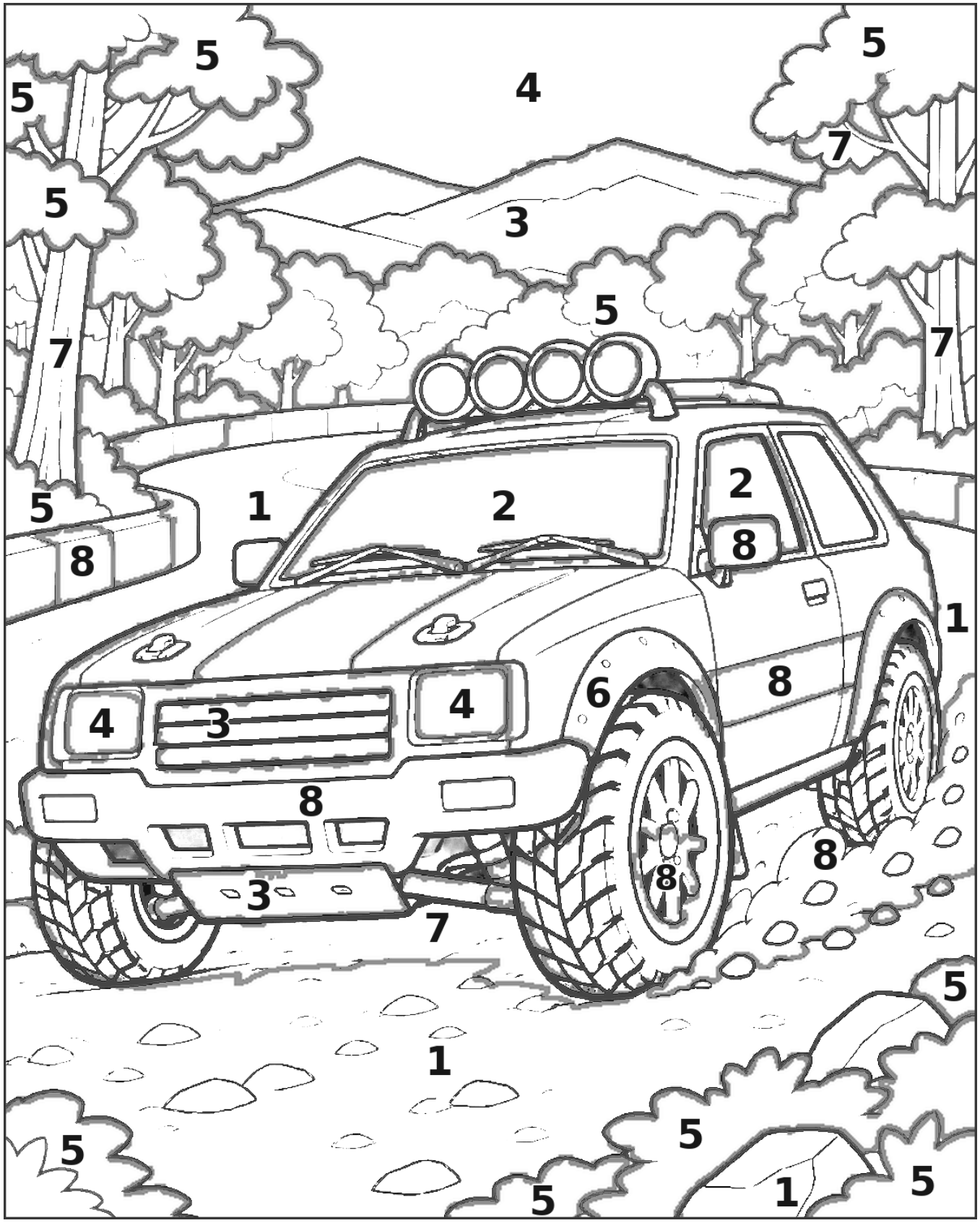

1 Sand
2 Sky
3 Dusk
4 Butter
5 Copper
6 Teal
7 Cocoa
8 Cream

Did you know? Loose gravel can shift under a tire. The raised blocks give the tire edges that can press into the surface. The gaps between the blocks leave room for loose grit to move instead of packing into a smooth layer.

Classic Convertible

Where does a convertible's roof go?



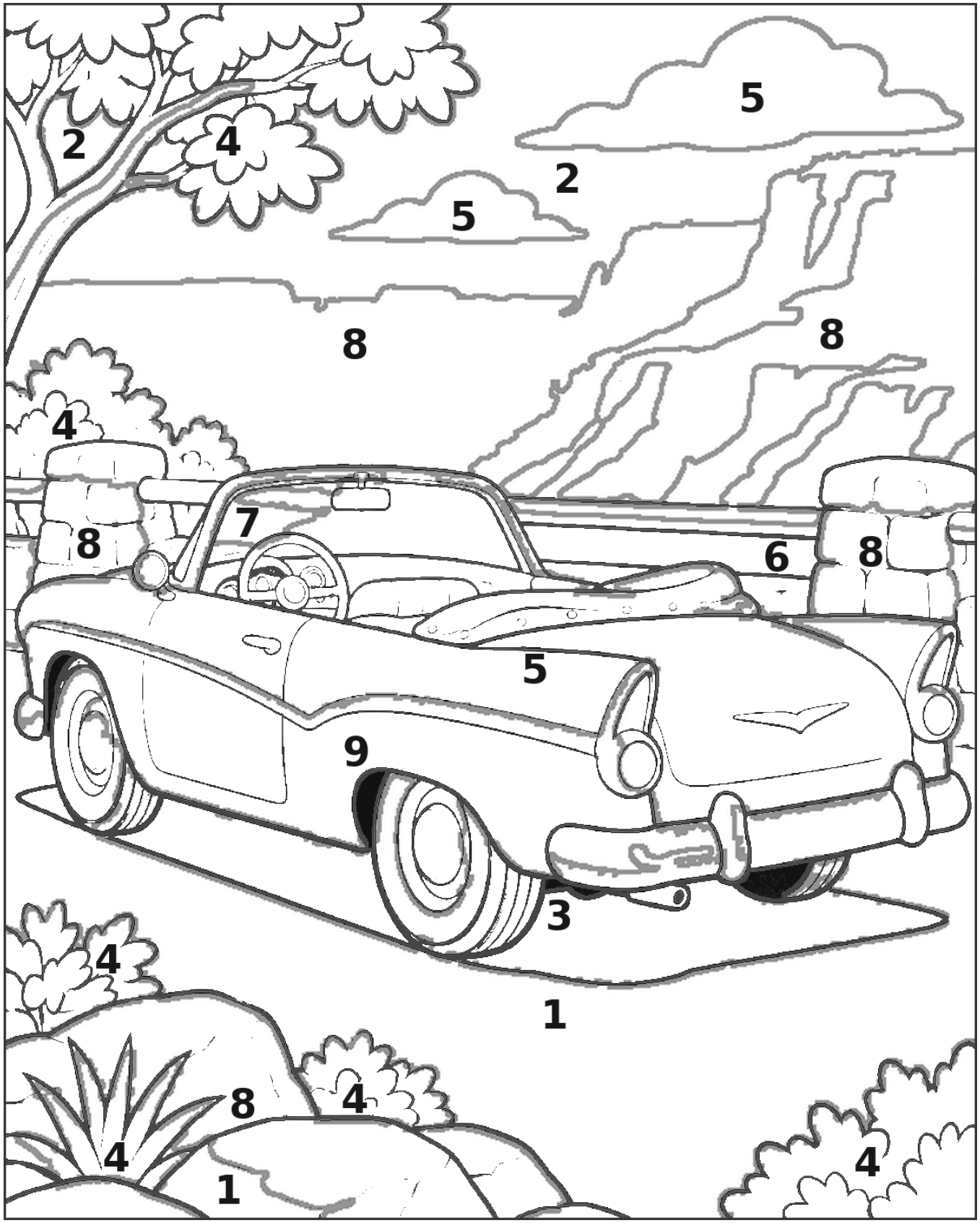

1 Clay
2 Sky
3 Charcoal
4 Moss
5 Cream
6 Walnut
7 Lilac
8 Copper
9 Lagoon

Did you know? On a soft-top convertible, the roof is stretched over a hinged frame. The frame folds so the cloth roof can rest in a space behind the seats. Raising the frame closes the cabin again.

Flatbed Tow Truck

How does a flatbed get a car up onto its deck?

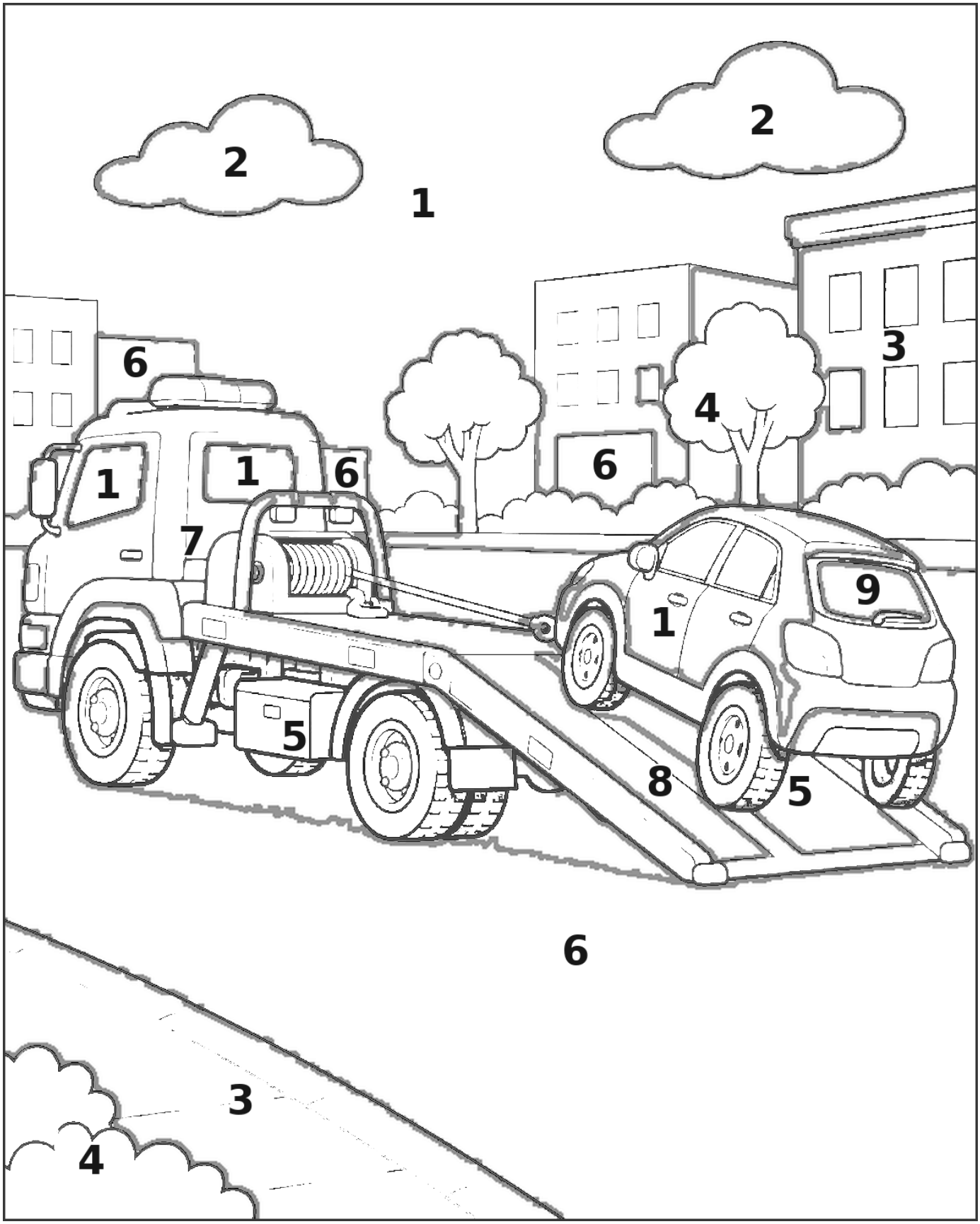

1 Ice
2 Lilac
3 Cream
4 Moss
5 Plum
6 Lagoon
7 Honey
8 Mauve
9 Sky

Did you know? The flatbed tilts so its back end meets the ground. A winch can help draw the car up the sloping deck. Once the car is in place and secured, the deck returns to its flat position.

Electric Car Charging

Where does an electric car store its energy?

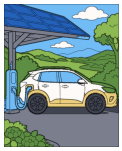

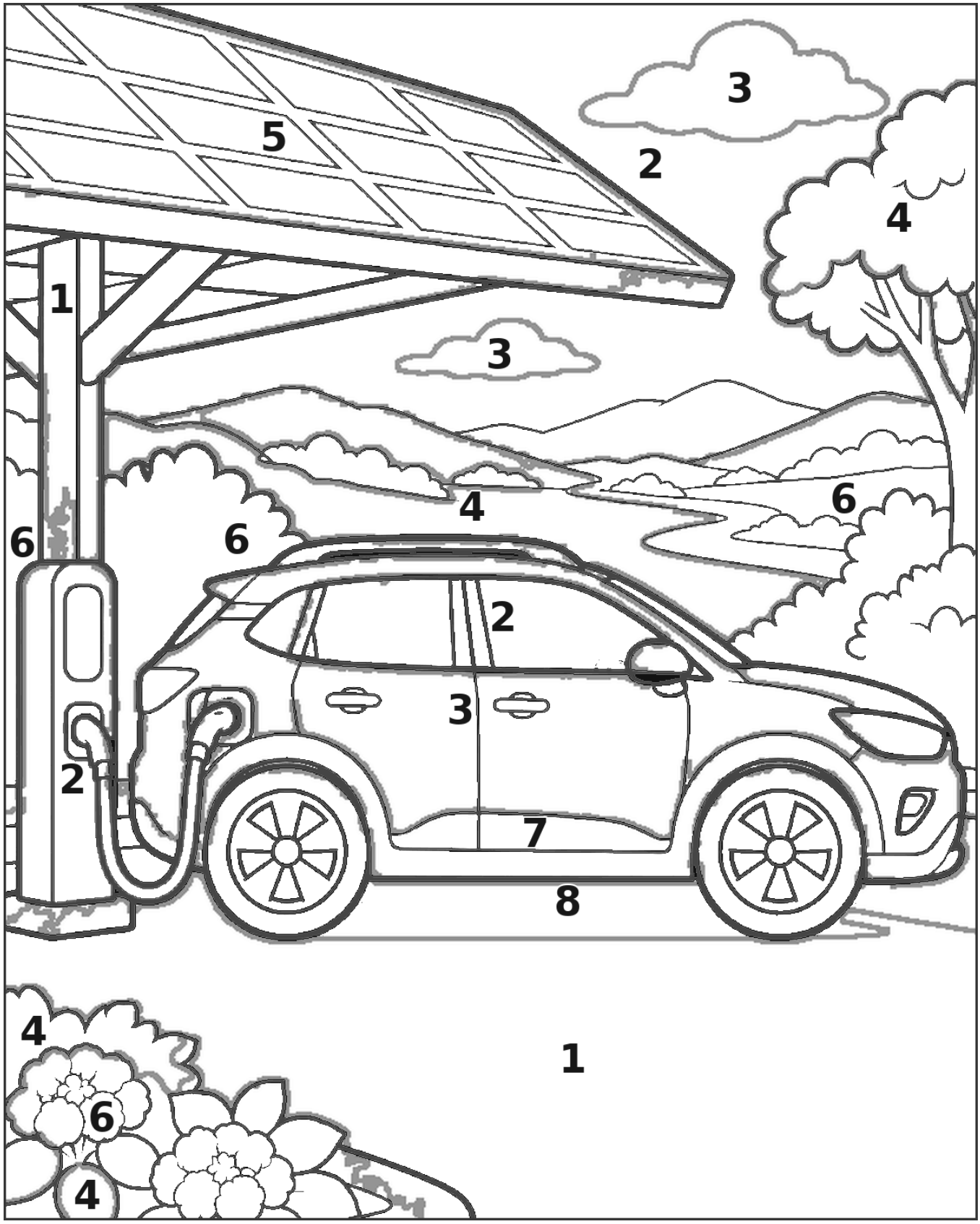

1 Ash
2 Sky
3 Snow
4 Moss
5 Plum
6 Meadow
7 Butter
8 Charcoal

Did you know? Electricity enters through the charge port and charges a battery pack. Later the battery supplies power to an electric motor. The motor turns the wheels when the driver asks the car to move.

Kart Corner

Why does a racing kart look so low?

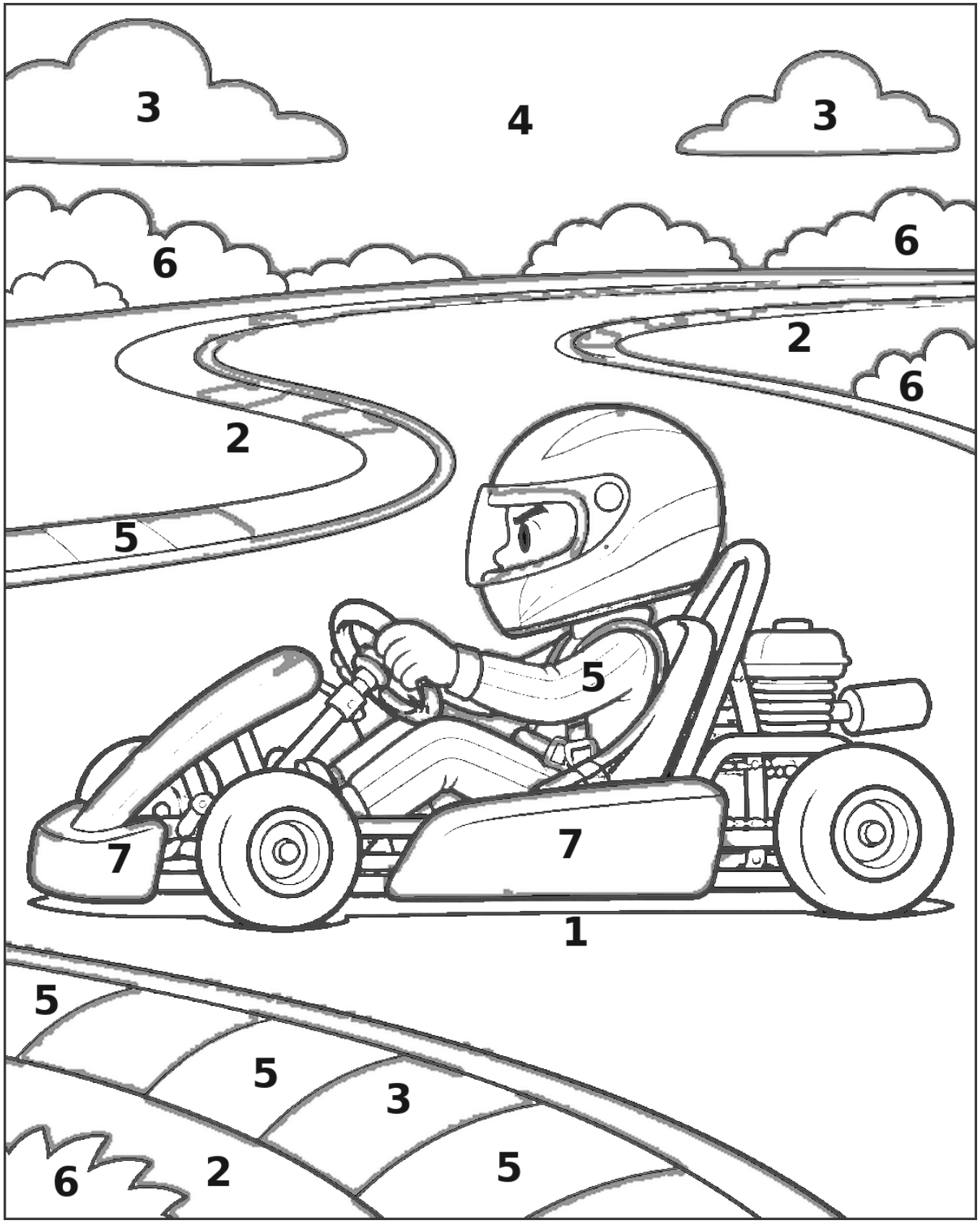

1 Plum
2 Moss
3 Parchment
4 Sky
5 Rust
6 Meadow
7 Berry

Did you know? A racing kart has a compact chassis, small wheels and a seat close to the track. Its light bodywork leaves the wheels visible. The low seat is easy to spot when you compare the kart with a full-size race car.

Orchard Pickup

Why does a pickup have an open bed?

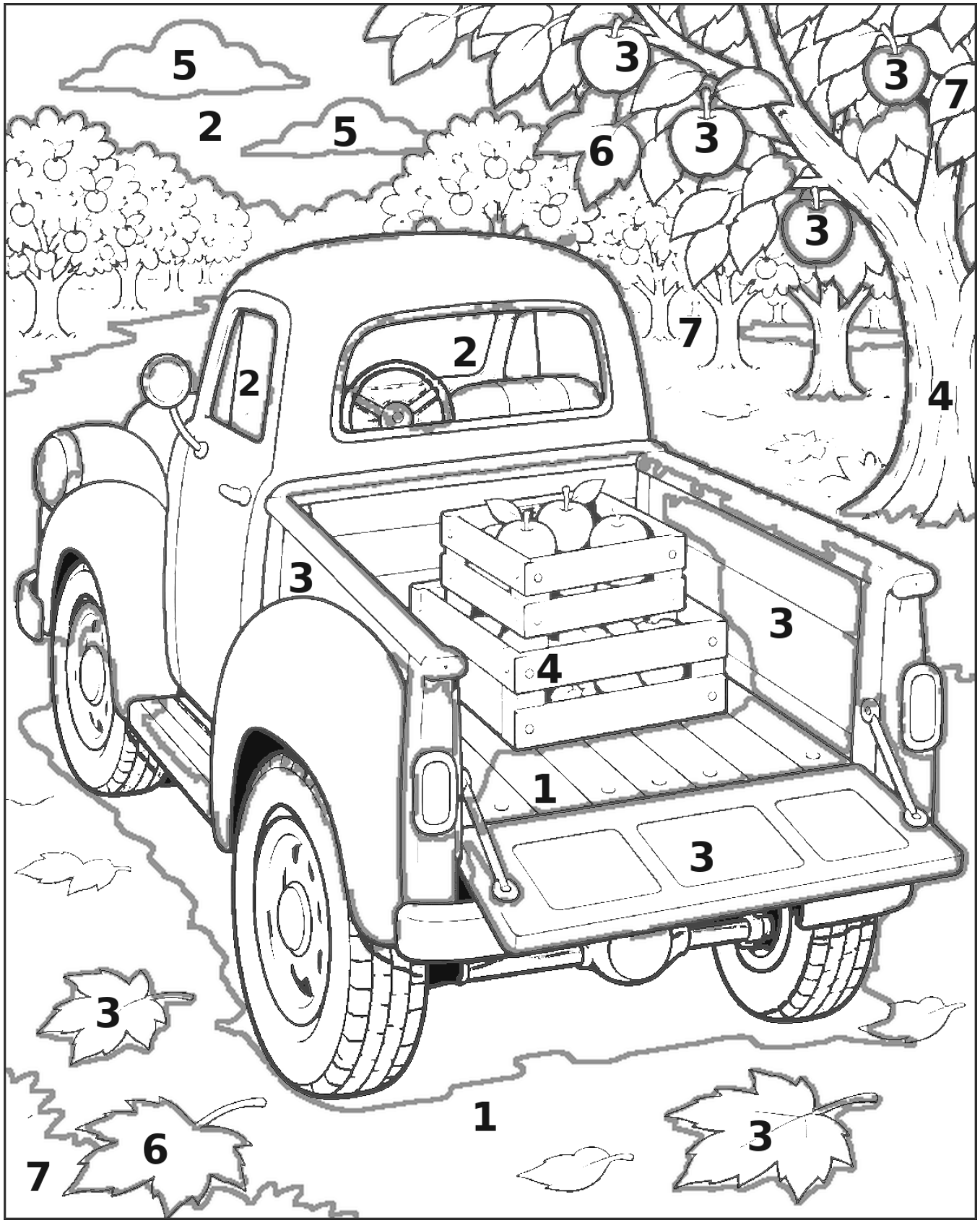

1 Apricot
2 Sky
3 Copper
4 Chestnut
5 Parchment
6 Gold
7 Meadow

Did you know? The separate bed gives bulky things, such as fruit crates, room outside the passenger cabin. A tailgate can lower to give easier access. Loads need to be secured so they stay in place during the ride.

Snowplow at Dawn

Why is a snowplow blade angled?



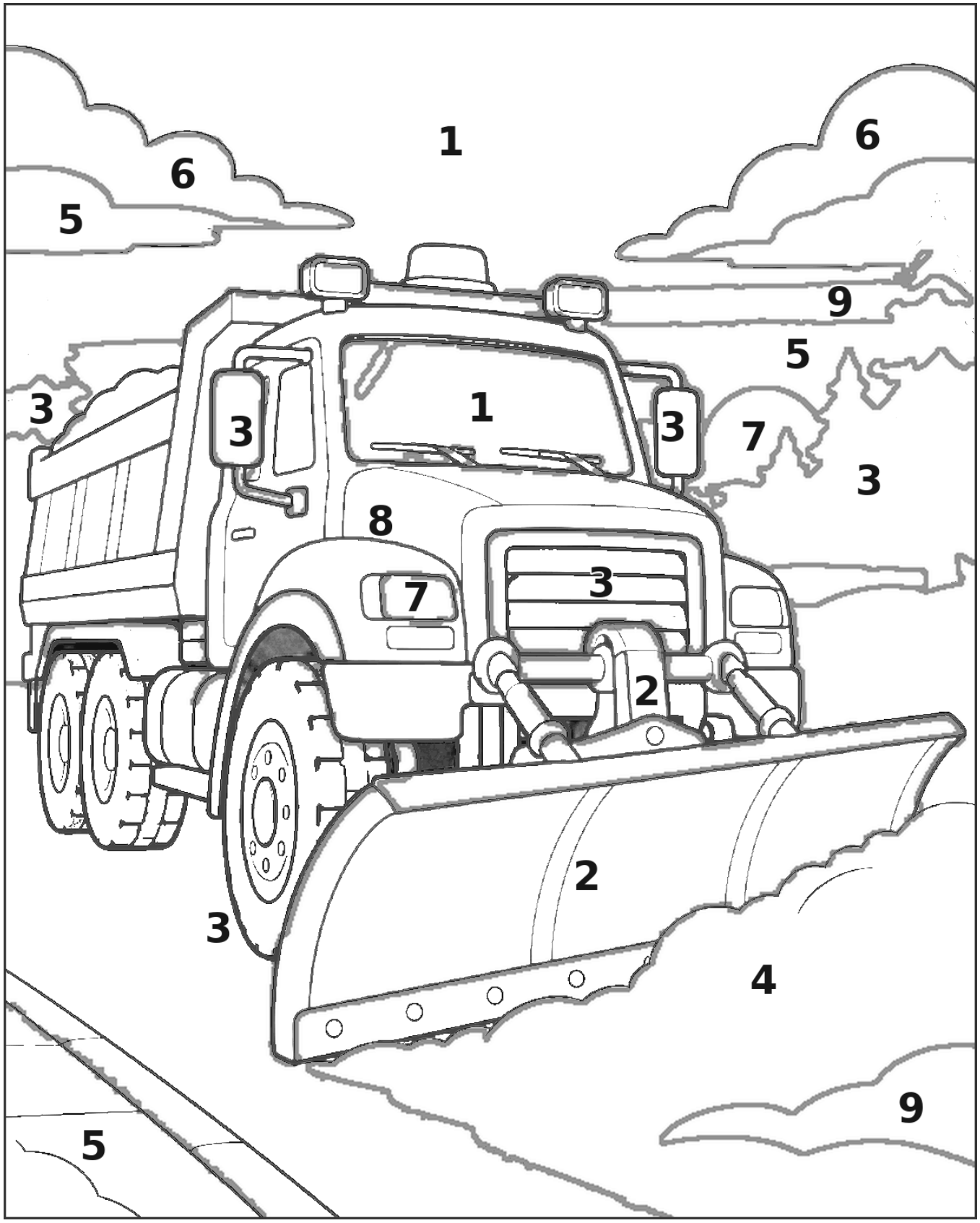

1 Sky
2 Gold
3 Dusk
4 Ice
5 Lilac
6 Parchment
7 Ivory
8 Honey
9 Lagoon

Did you know? An angled blade pushes snow ahead and off to one side as the truck moves. Snow can gather in a low bank beside the newly cleared strip. A plow can make several passes to clear a wide road.

Market Microcar

What makes a microcar handy in a crowded town?





1 Gold
2 Lagoon
3 Cocoa
4 Meadow
5 Peach
6 Periwinkle
7 Cream
8 Apricot

Did you know? A very small car takes up less space from bumper to bumper. That can make it easier to fit into a short parking space. Early microcars often had room for just one or two people.

Monster Truck Jump

What helps a monster truck land after a jump?

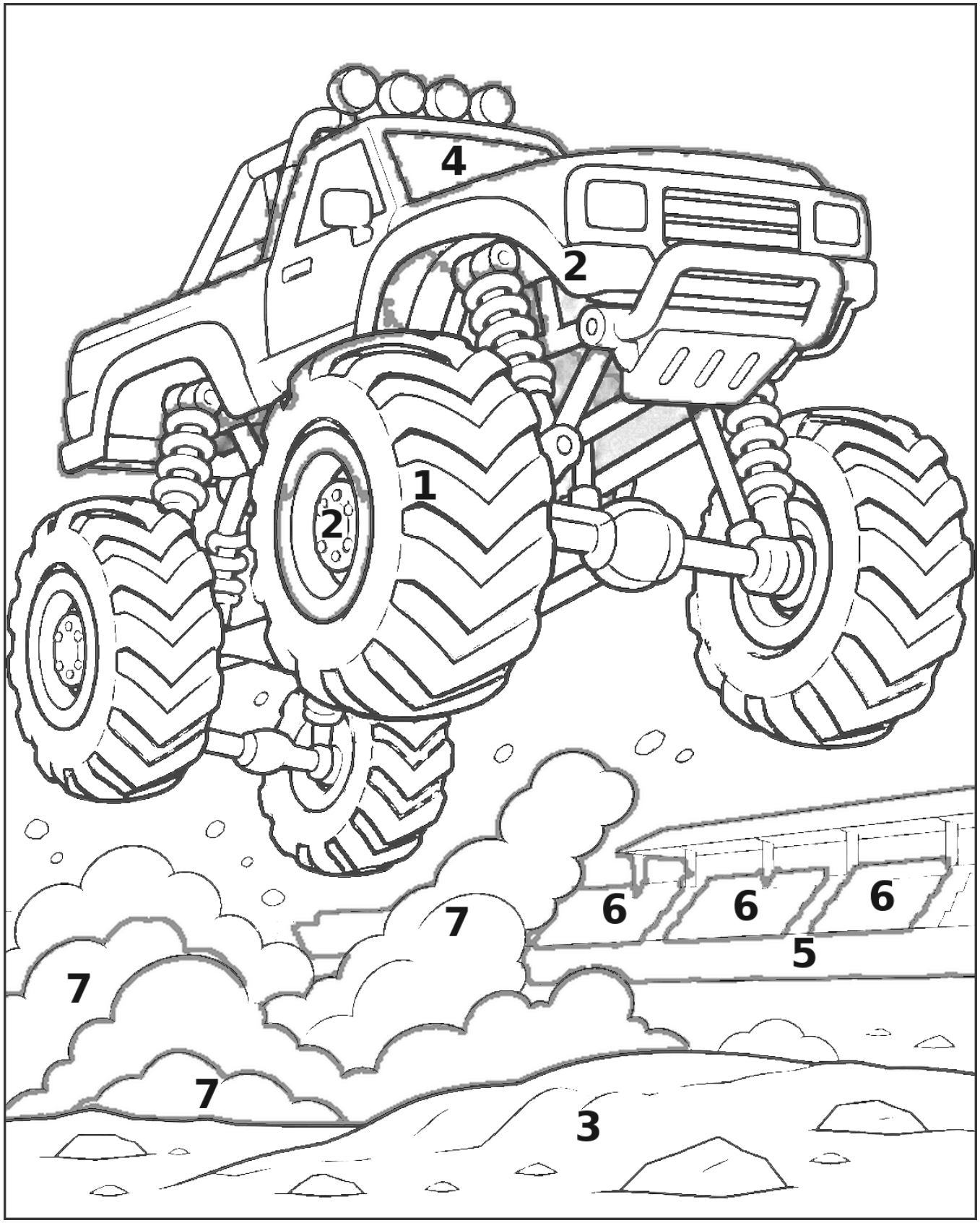

1 Butter
2 Seafoam
3 Copper
4 Denim
5 Oat
6 Dusk
7 Gold

Did you know? The wheels can move up and down a long way as the truck lands. Springs take up part of the motion and shocks help slow the bounce. Look for the space between the giant tires and the truck body.

Recycling Truck

How does a truck lift a recycling cart?

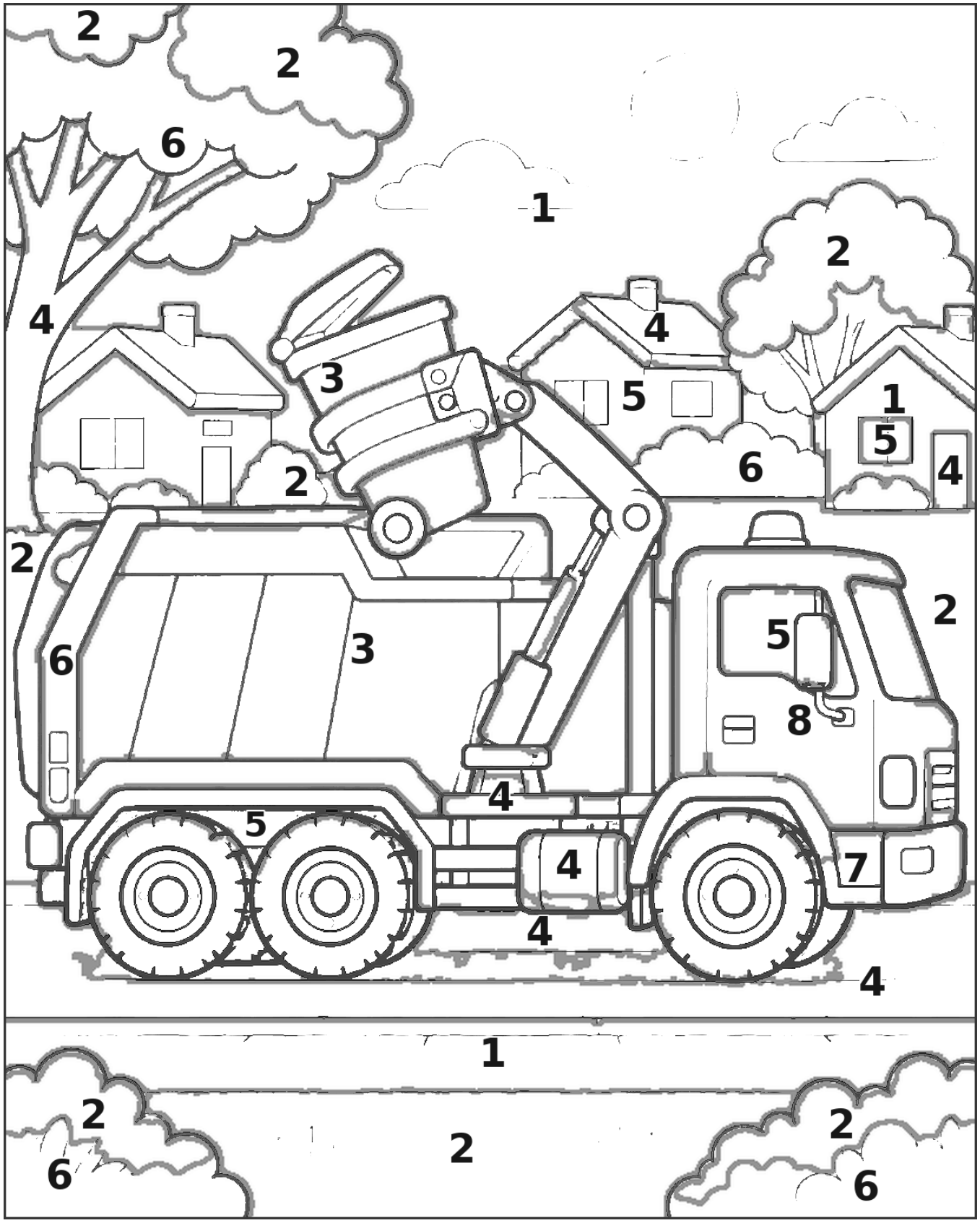

1 Butter
2 Sage
3 Dusk
4 Coral
5 Sky
6 Meadow
7 Plum
8 Seafoam

Did you know? A side-loading truck can use a moving arm and a gripper to pick up a cart. In this picture the arm is lifting the cart toward the opening. The truck can tip the cart, then return it to the curb.

Camper by the Lake

What turns a van into a little campsite?

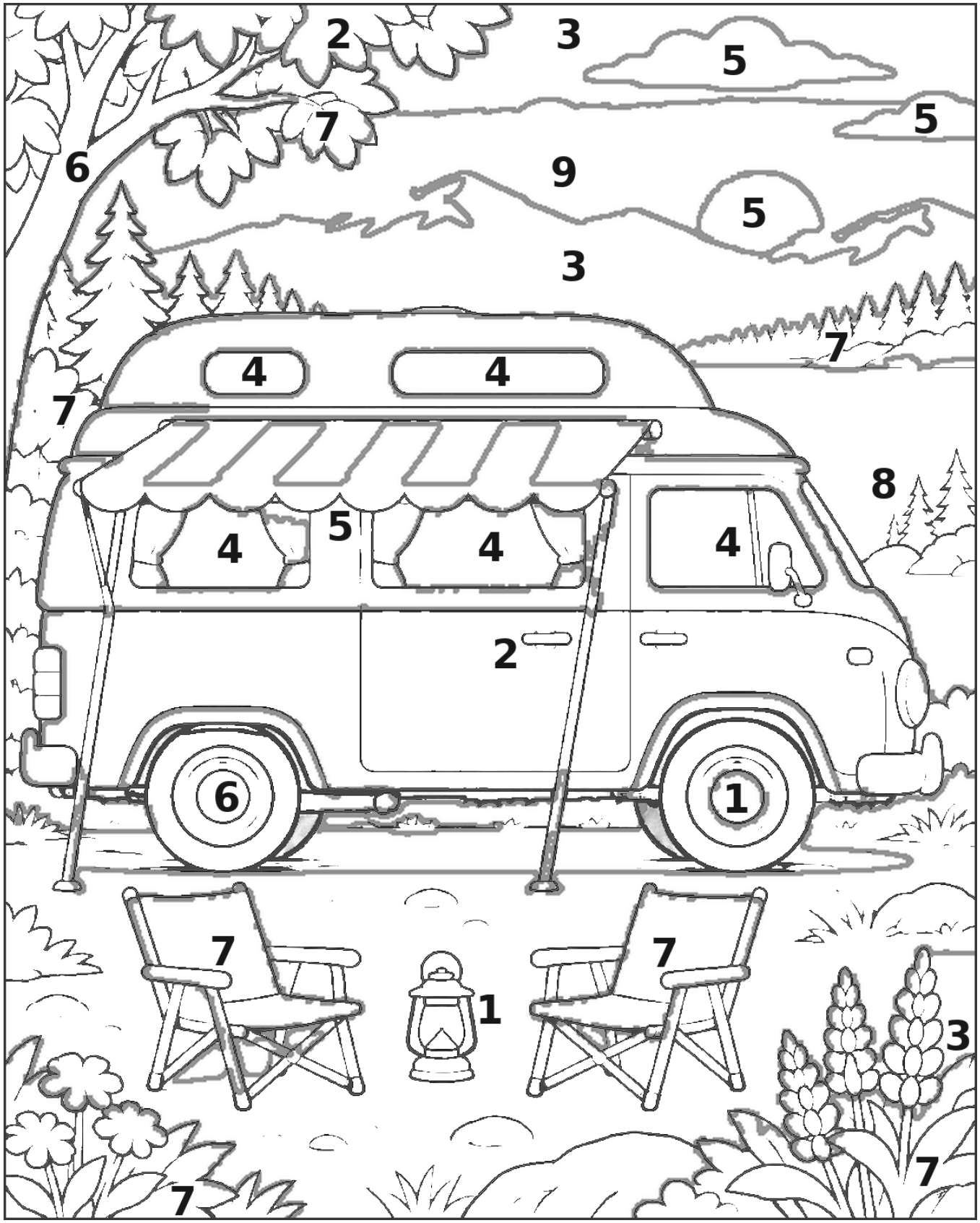

1 Apricot
2 Sage
3 Mauve
4 Sky
5 Cream
6 Cocoa
7 Meadow
8 Lagoon
9 Coral

Did you know? A camper can carry a bed and a small place to store food and gear. A campsite gives the parked van a place to stay overnight. An awning outside can make a shady spot for a table or chairs.

Racing Pit Stop

How can a pit crew change the wheels so fast?

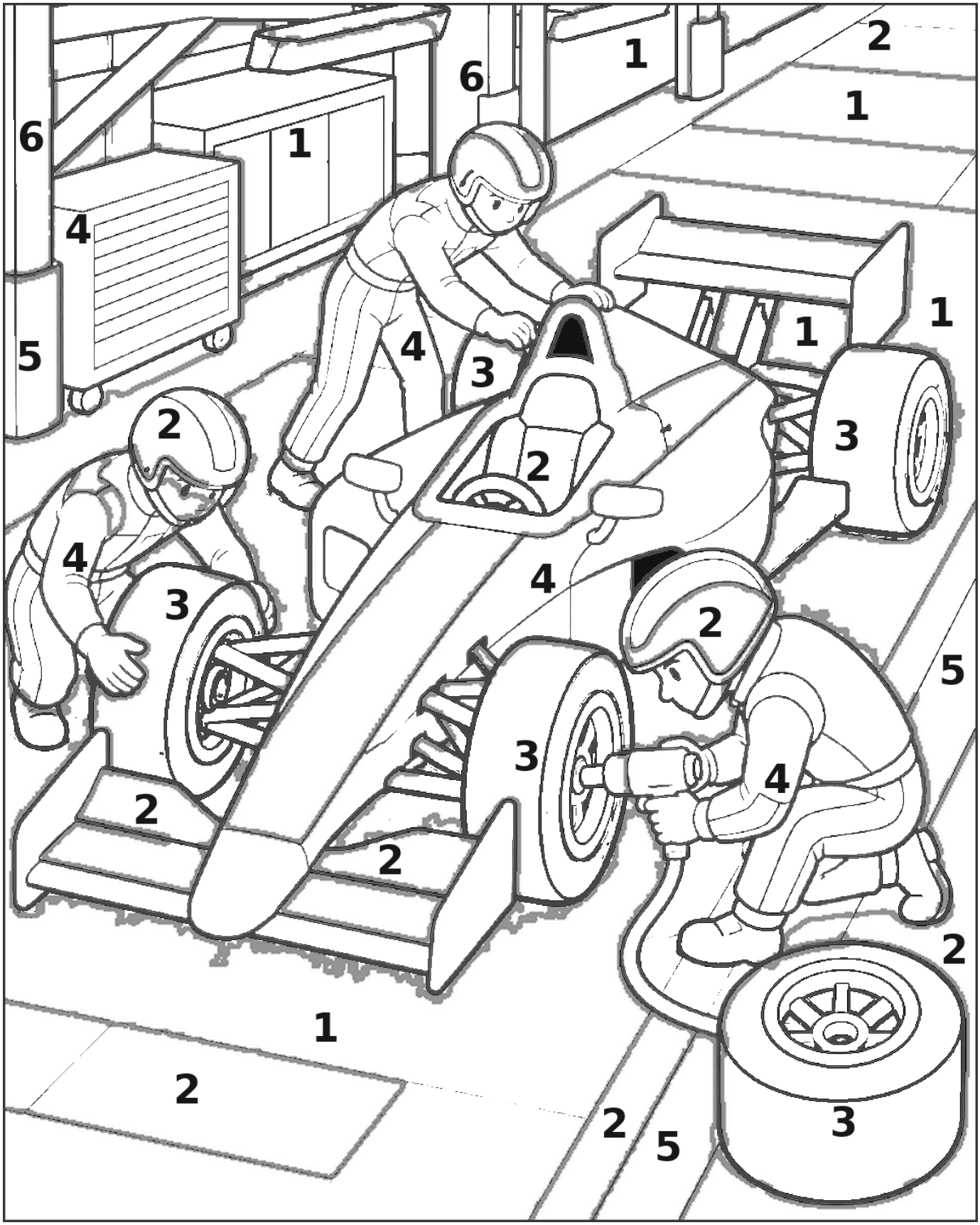

1 Denim
2 Parchment
3 Charcoal
4 Rust
5 Gold
6 Ash

Did you know? A crew splits the work into small jobs and rehearses them. One person takes off a wheel, another brings the new one and a third works the wheel gun. Teams at different wheels can work at the same time.

City Taxi

How can people spot a taxi in busy traffic?



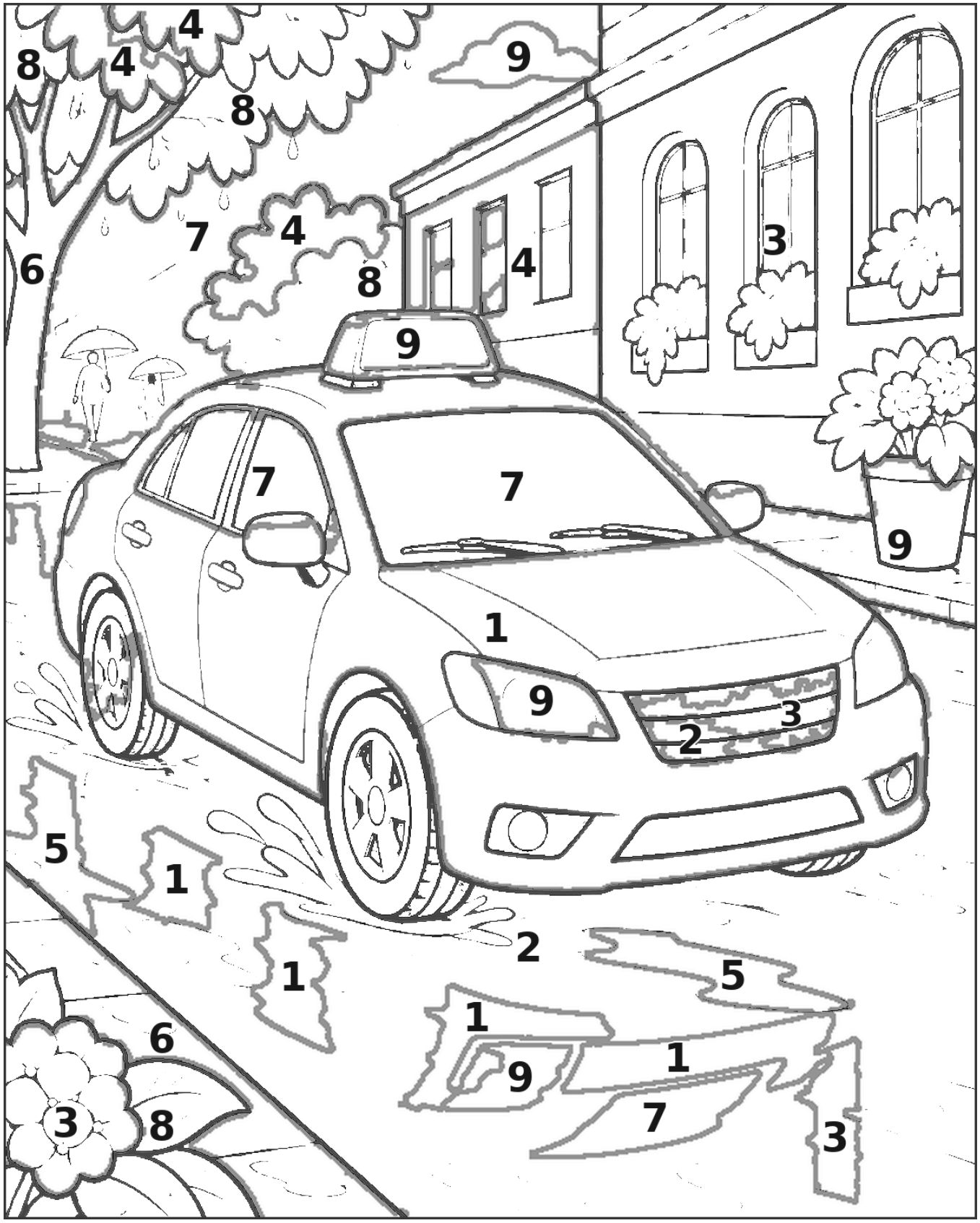

1 Gold
2 Denim
3 Lilac
4 Moss
5 Sky
6 Stone
7 Lagoon
8 Meadow
9 Parchment

Did you know? A bright body color makes a taxi easy to pick out. In New York City, yellow taxis are licensed to pick up people who hail them on the street. The roof light is another shape to look for above the traffic.

Highway Big Rig

How does a tractor pull a trailer through a turn?

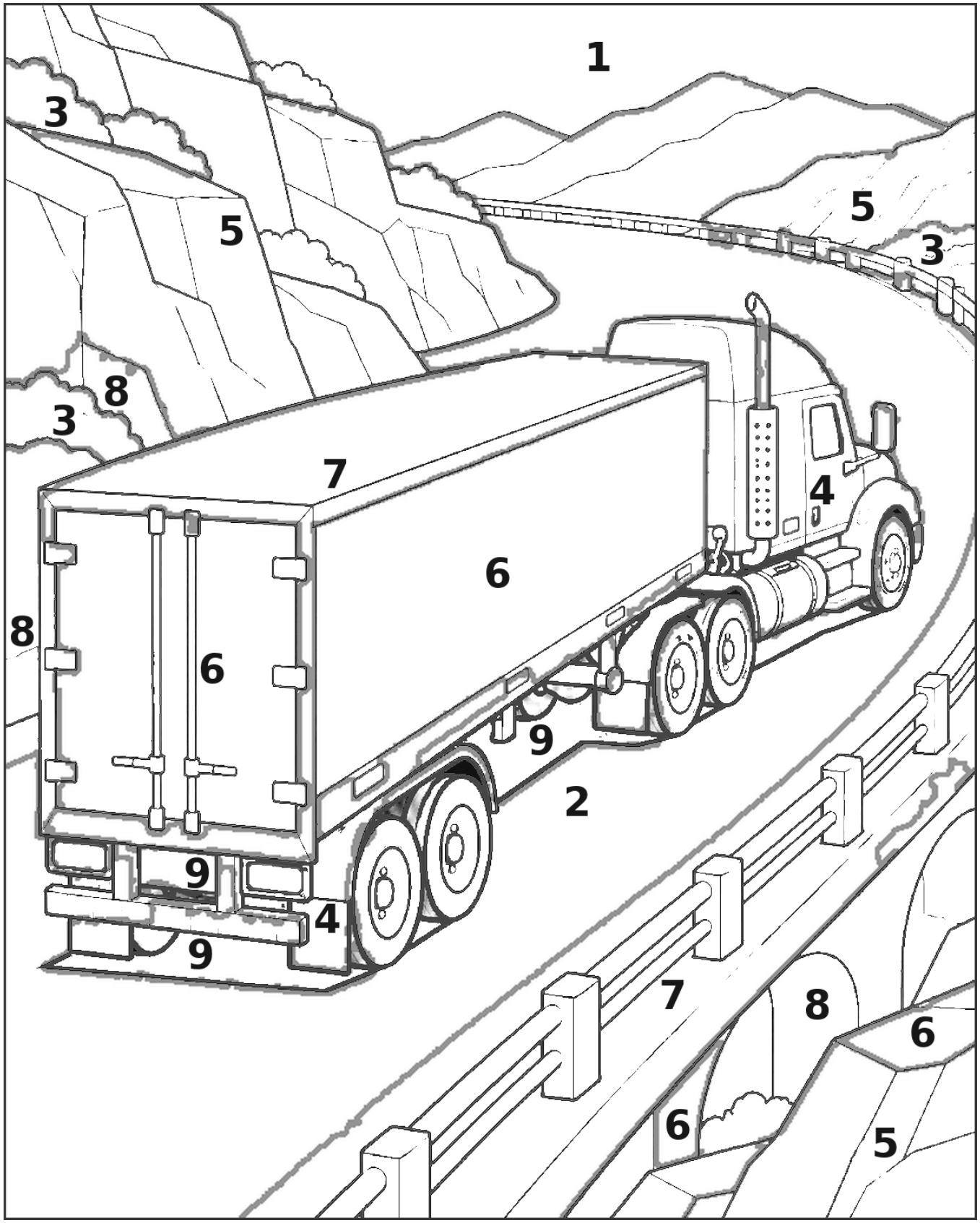

1 Butter
2 Ash
3 Moss
4 Teal
5 Copper
6 Gold
7 Parchment
8 Chestnut
9 Charcoal

Did you know? A coupling called a fifth wheel connects the tractor to the front of the trailer. The two can pivot at that connection as the tractor turns. The trailer's own wheels support the back of the load.

Off-Road Creek

What does four-wheel drive mean?





1 Butter	**2 Sky**	**3 Plum**
4 Moss	**5 Denim**	**6 Clay**
7 Stone	**8 Honey**	**9 Ivory**

Did you know? A four-wheel-drive system can send power to the wheels on both axles. That can help a vehicle keep moving when some tires have less grip on a rough surface. Look for the chunky tire shapes on the off-road vehicle.

Fire Engine Ready

What can a fire engine carry besides its crew?



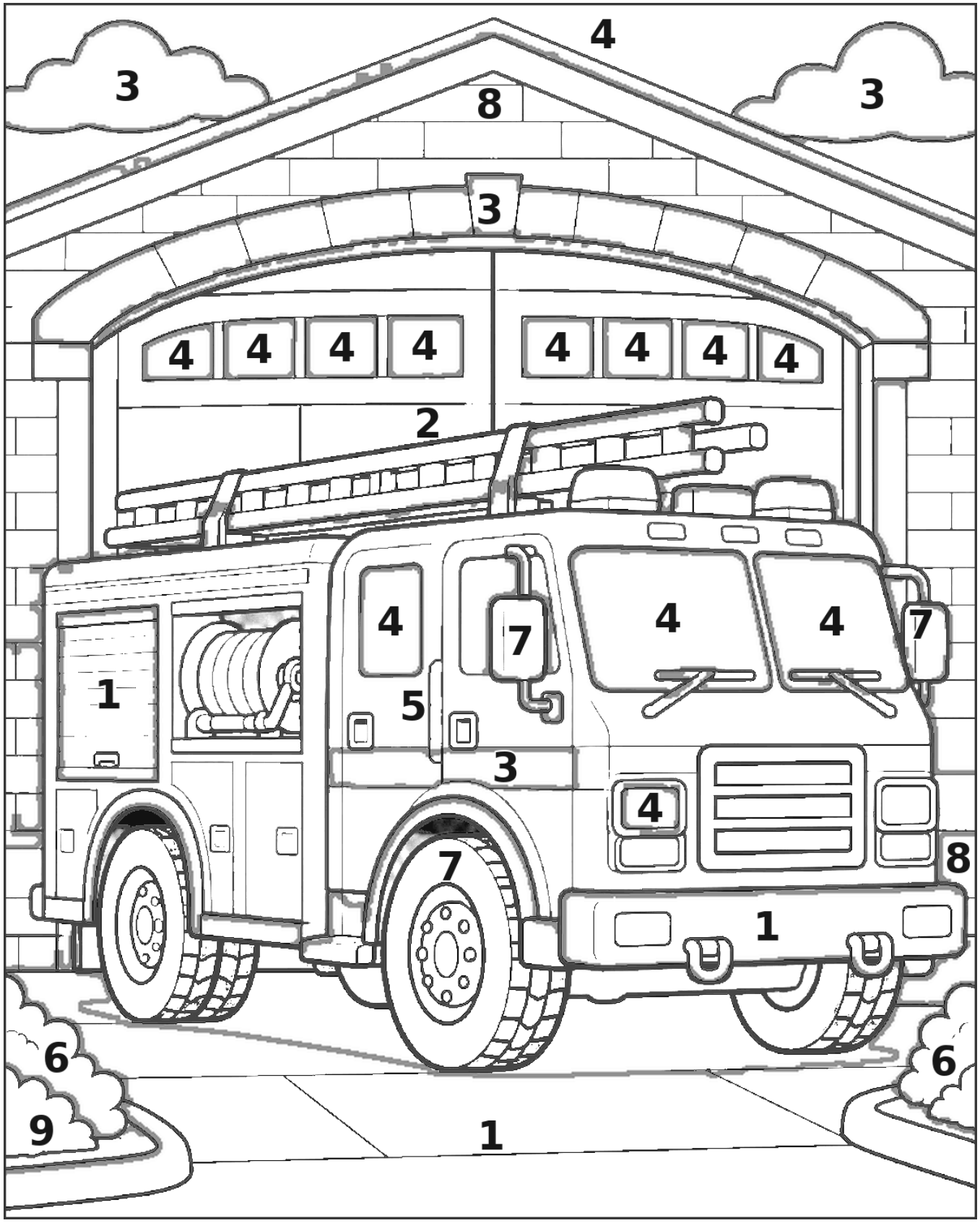

1 Ash
2 Ink blue
3 Cream
4 Sky
5 Rust
6 Moss
7 Plum
8 Copper
9 Olive

Did you know? A fire engine can carry water, hoses and a pump that moves water into the hoses. Long tools and ladders can ride in their own places. Compartments at the sides keep smaller equipment organized.

Coupe in the Canyon

Can a car have its engine at the back?

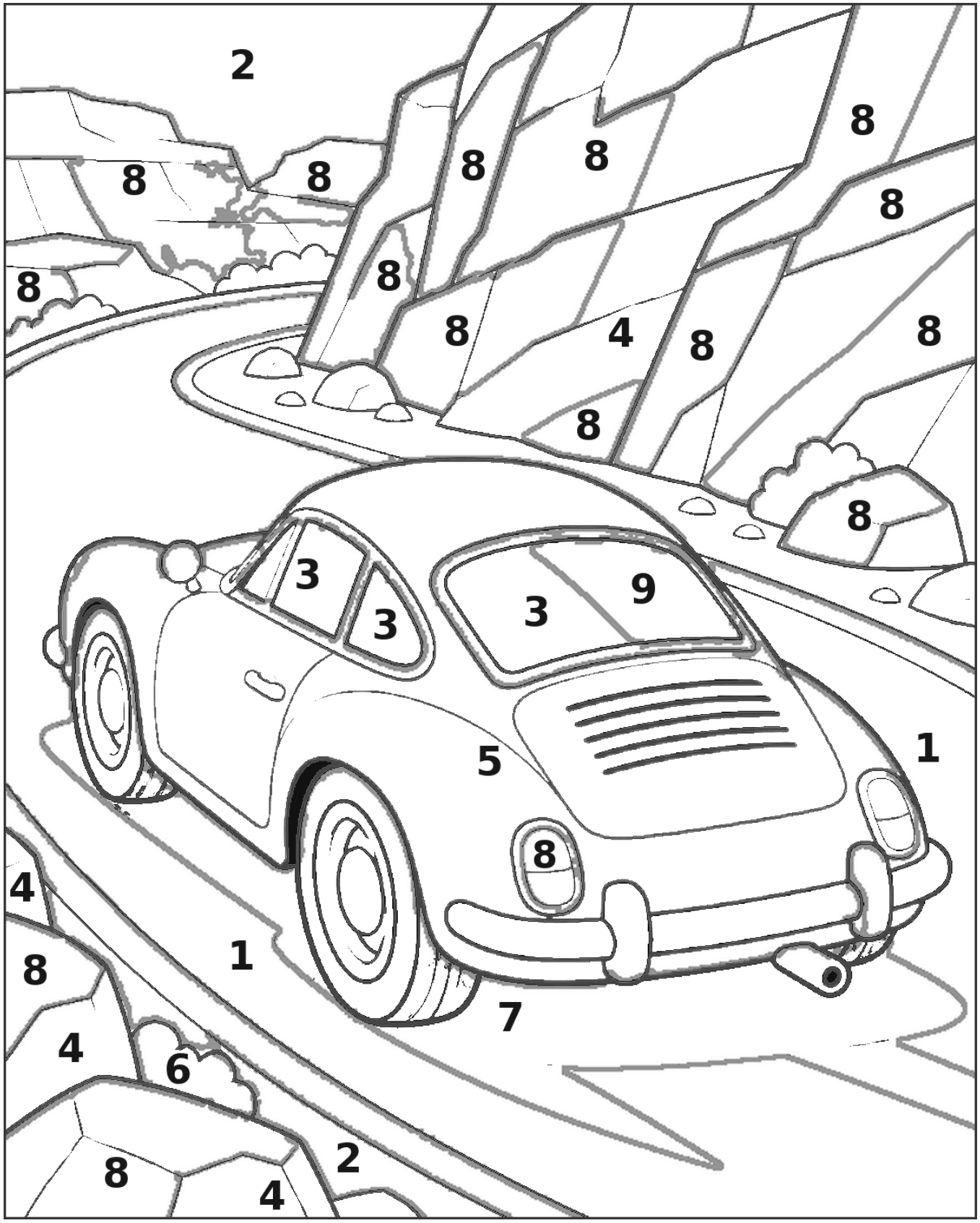

1 Ash	**2 Butter**	**3 Lagoon**
4 Rust	**5 Plum**	**6 Moss**
7 Charcoal	**8 Honey**	**9 Ice**

Did you know? Some cars put the engine behind the passenger cabin. A rear-engined design places much of the engine's weight near the rear wheels. On this drawing, the slots behind the rear window hint at where the engine sits.

Parcel Van

How does a parcel get a tracking update?





1 Dusk
2 Sky
3 Pearl
4 Moss
5 Lilac
6 Copper
7 Gold
8 Chestnut
9 Teal

Did you know? A parcel has a label with a code that identifies it. When the carrier scans the label at a stop along the way, the tracking system can report a new step in its trip. A delivery scan can show when it reaches its destination.

Solar Race Car

How can sunlight help power a car?



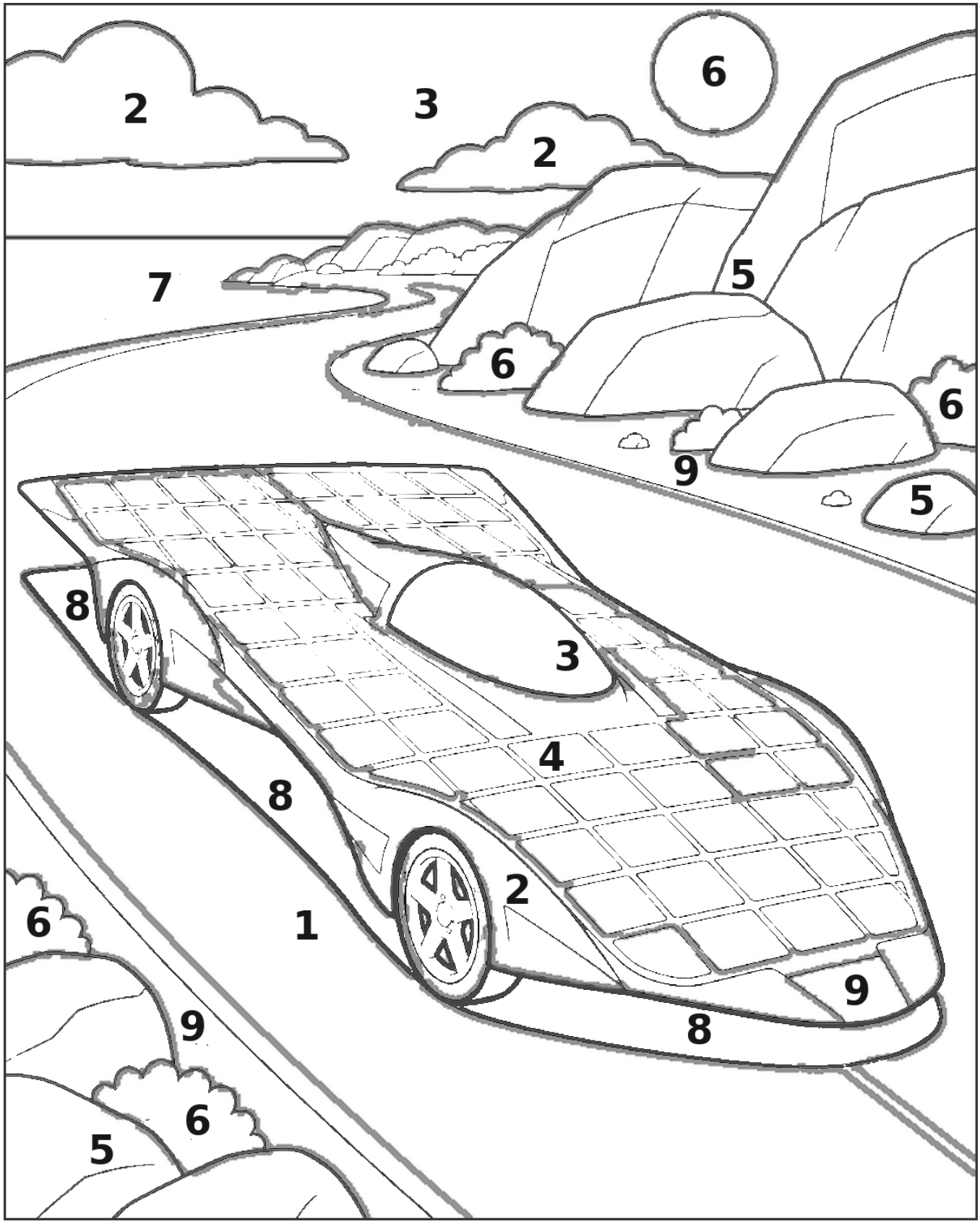

1 Plum
2 Parchment
3 Sky
4 Berry
5 Honey
6 Moss
7 Denim
8 Charcoal
9 Butter

Did you know? Solar cells on the body turn some of the sunlight they receive into electricity. That electricity can power the motor or charge a battery. A wide panel area gives the car more space to collect sunlight.

Ice Cream Van

How does an ice cream van keep its treats cold?



1 Sky
2 Peach
3 Plum
4 Moss
5 Cocoa
6 Cream
7 Olive
8 Denim
9 Periwinkle

Did you know? An insulated freezer slows the flow of heat from the warm air outside. Its cooling system removes heat from the inside. Keeping the compartment cold helps ice cream stay firm until serving time.

Van With a Side Ramp

What makes a side-entry ramp useful?



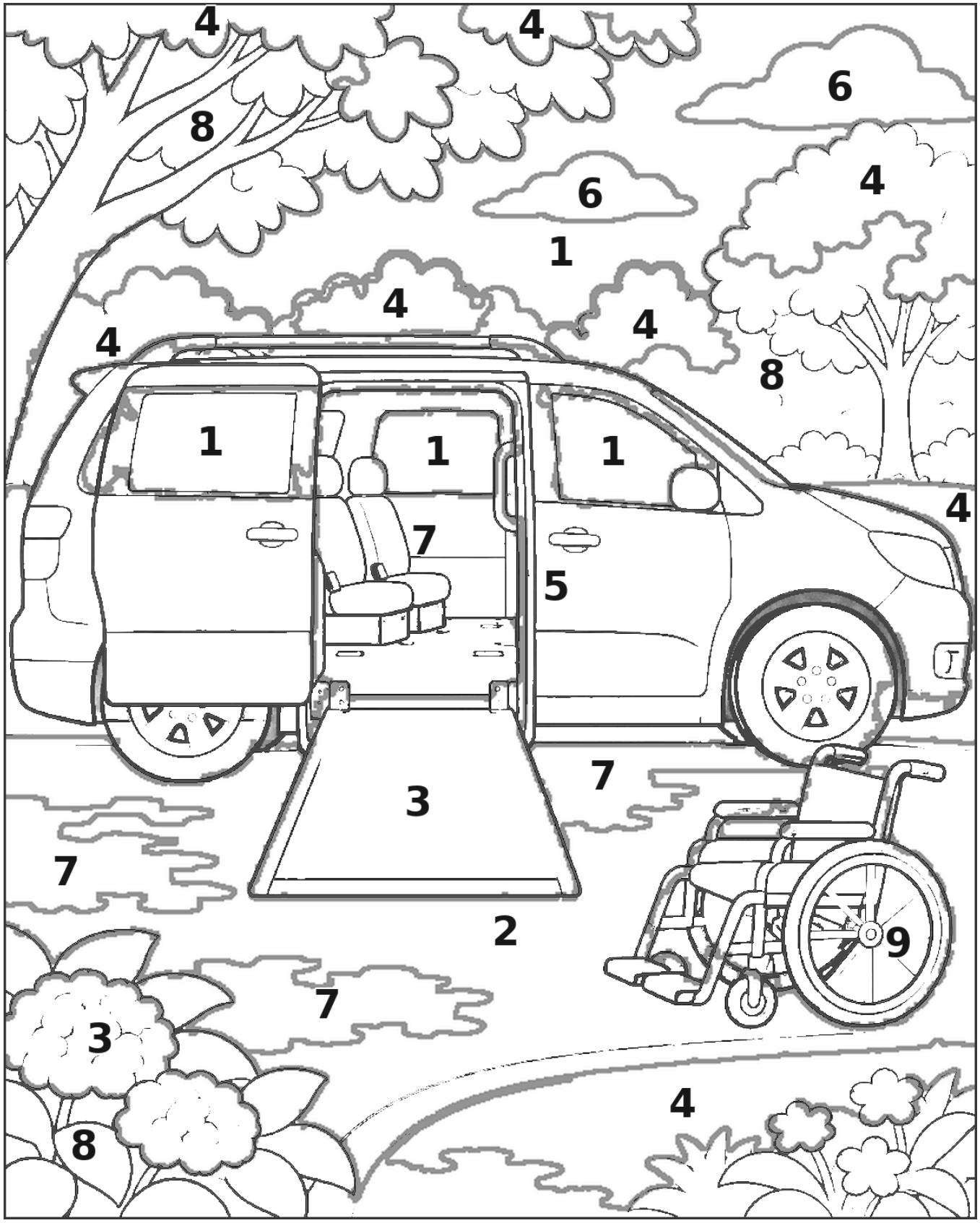

1 Sky
2 Peach
3 Ash
4 Moss
5 Rust
6 Parchment
7 Chestnut
8 Meadow
9 Denim

Did you know? A ramp bridges the height between pavement and the floor of a van. It can let a wheelchair roll through the open side door. Some ramps fold away inside the van when the door closes.

Dragster Launch

Why are a dragster's rear tires so wide?



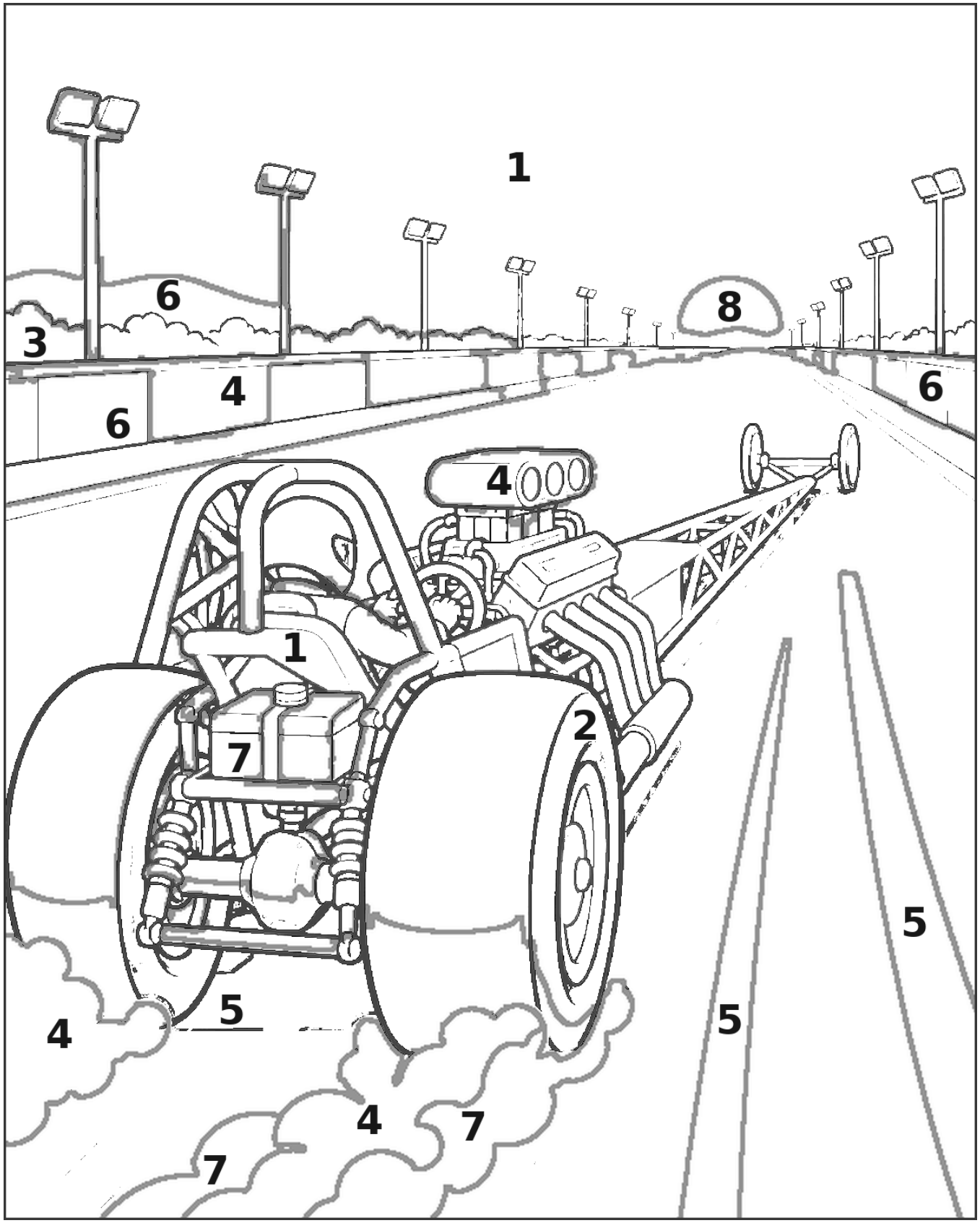

1 Honey
2 Plum
3 Olive
4 Pearl
5 Charcoal
6 Rust
7 Stone
8 Gold

Did you know? In a drag race, a car must accelerate from a stop as quickly as it can. The large rear tires are where the engine's push reaches the track. Their broad surface helps the car use the grip of the prepared track.

Wagon With a Canoe

How can a car carry a canoe that is longer than its cabin?





1 Apricot	**2 Sky**	**3 Meadow**
4 Cream	**5 Walnut**	**6 Rust**
7 Clay	**8 Teal**	**9 Moss**

Did you know? A roof rack gives a long canoe a place to rest above the roof. Its crossbars support the load, and straps keep the canoe from shifting while the car moves. Long boats can also use lines at the front and back.

Dune Buggy

What are the scoops on some sand tires for?



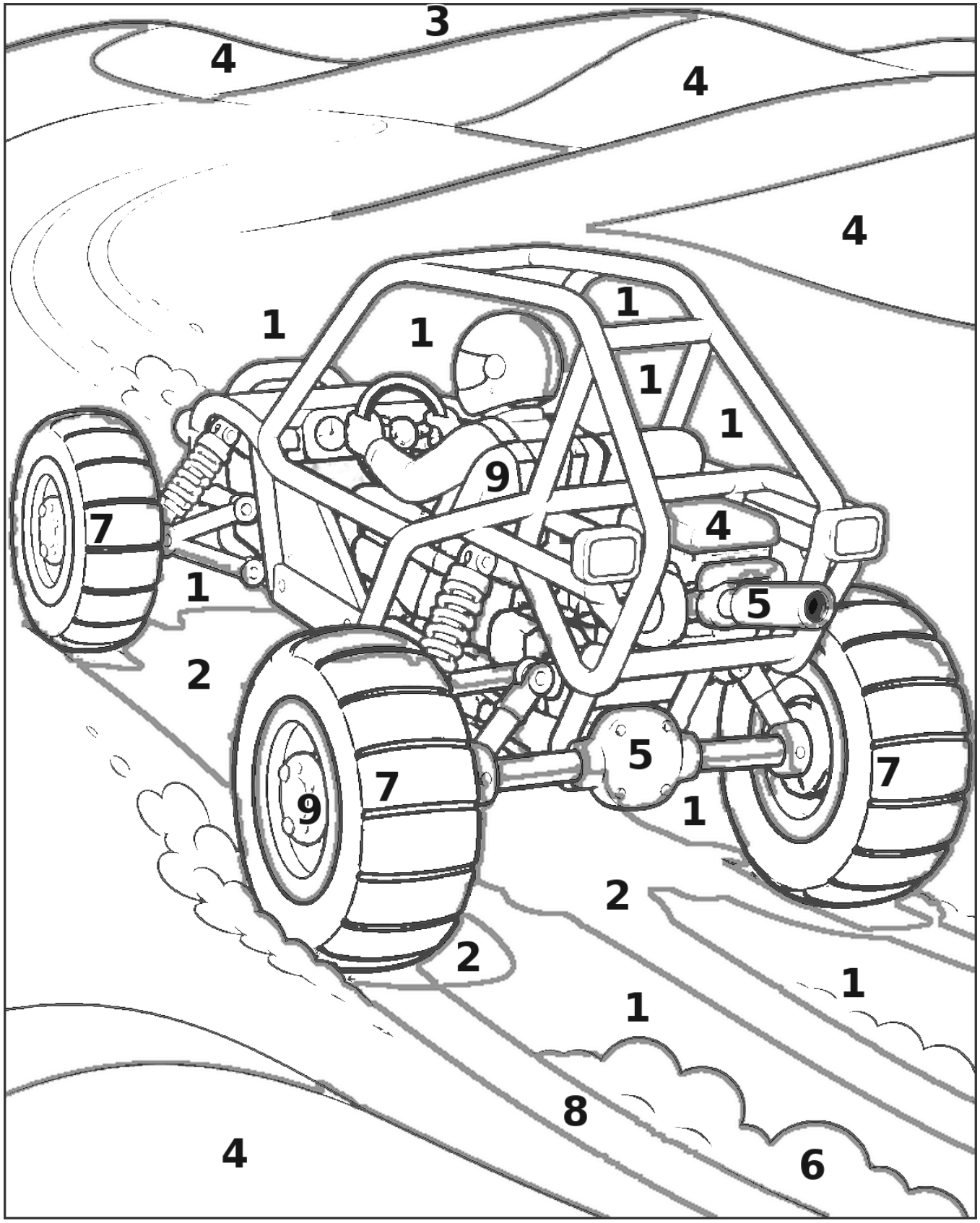

1 Gold	**2 Plum**	**3 Sky**
4 Honey	**5 Stone**	**6 Butter**
7 Charcoal	**8 Berry**	**9 Rust**

Did you know? Raised paddles on a sand tire push against loose sand as the wheel turns. That can give the vehicle a better push on a soft surface. From the side you can see how the big tire shapes meet the dune.

Car Ferry Ramp

How does a car get onto a ferry?



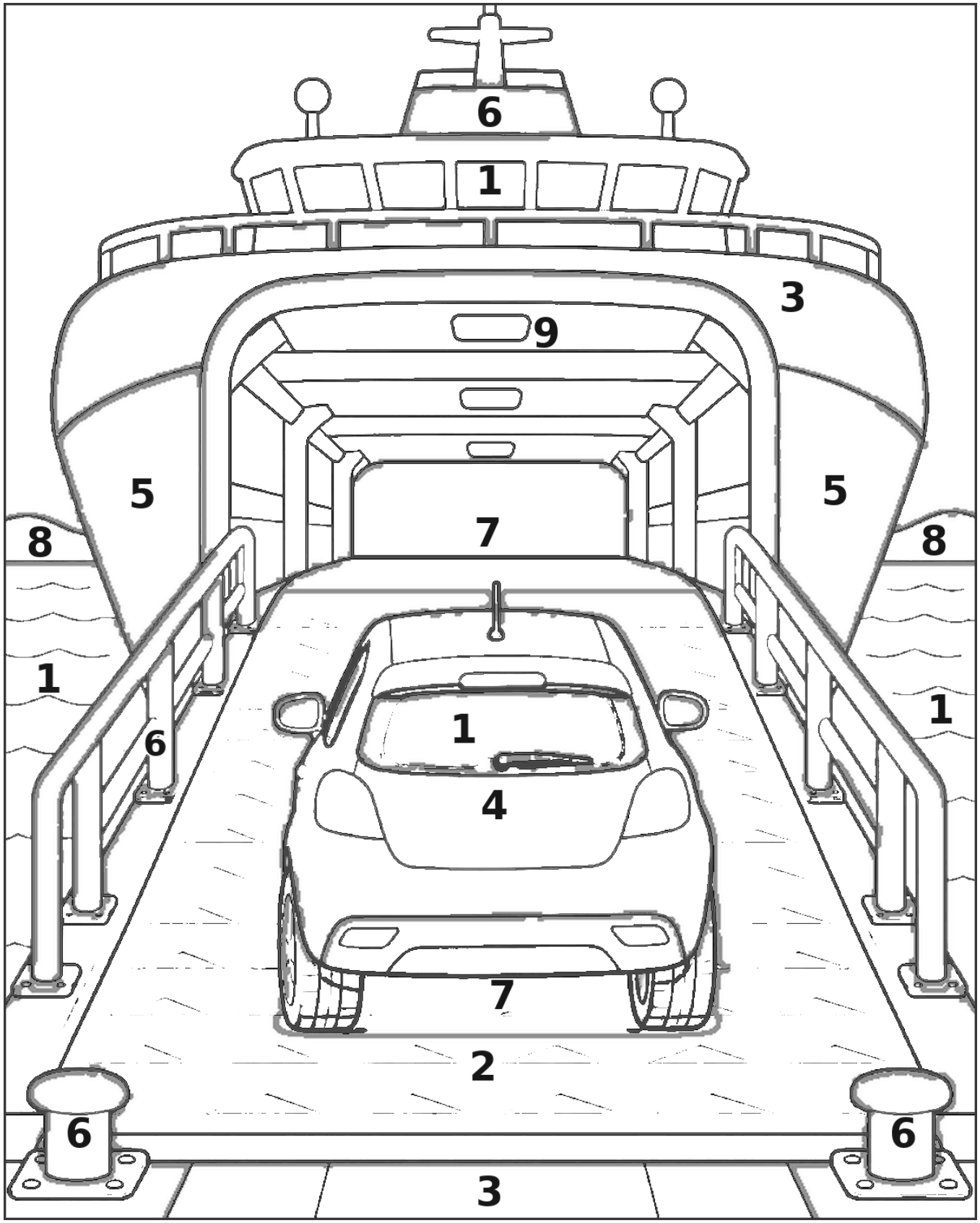

1 Sky
2 Ash
3 Parchment
4 Rust
5 Dusk
6 Gold
7 Plum
8 Moss
9 Clay

Did you know? At the dock, a loading ramp connects the shore to the ferry's vehicle deck. Cars follow the crew's directions as they roll on and park in rows. The ferry carries them across the water before the ramp is used again.